REVISION RECORD			
LTR	ECO NO:	APPROVED:	DATE:

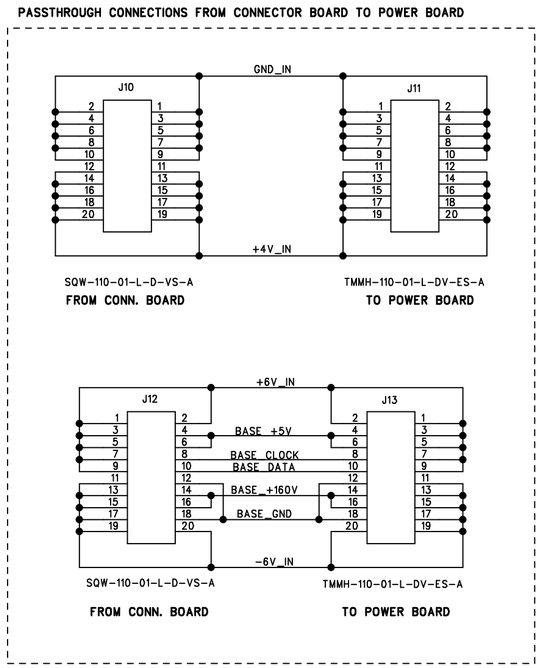

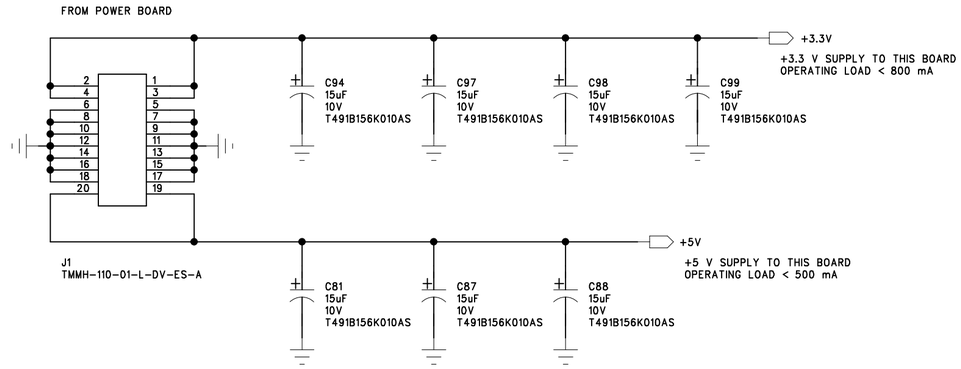

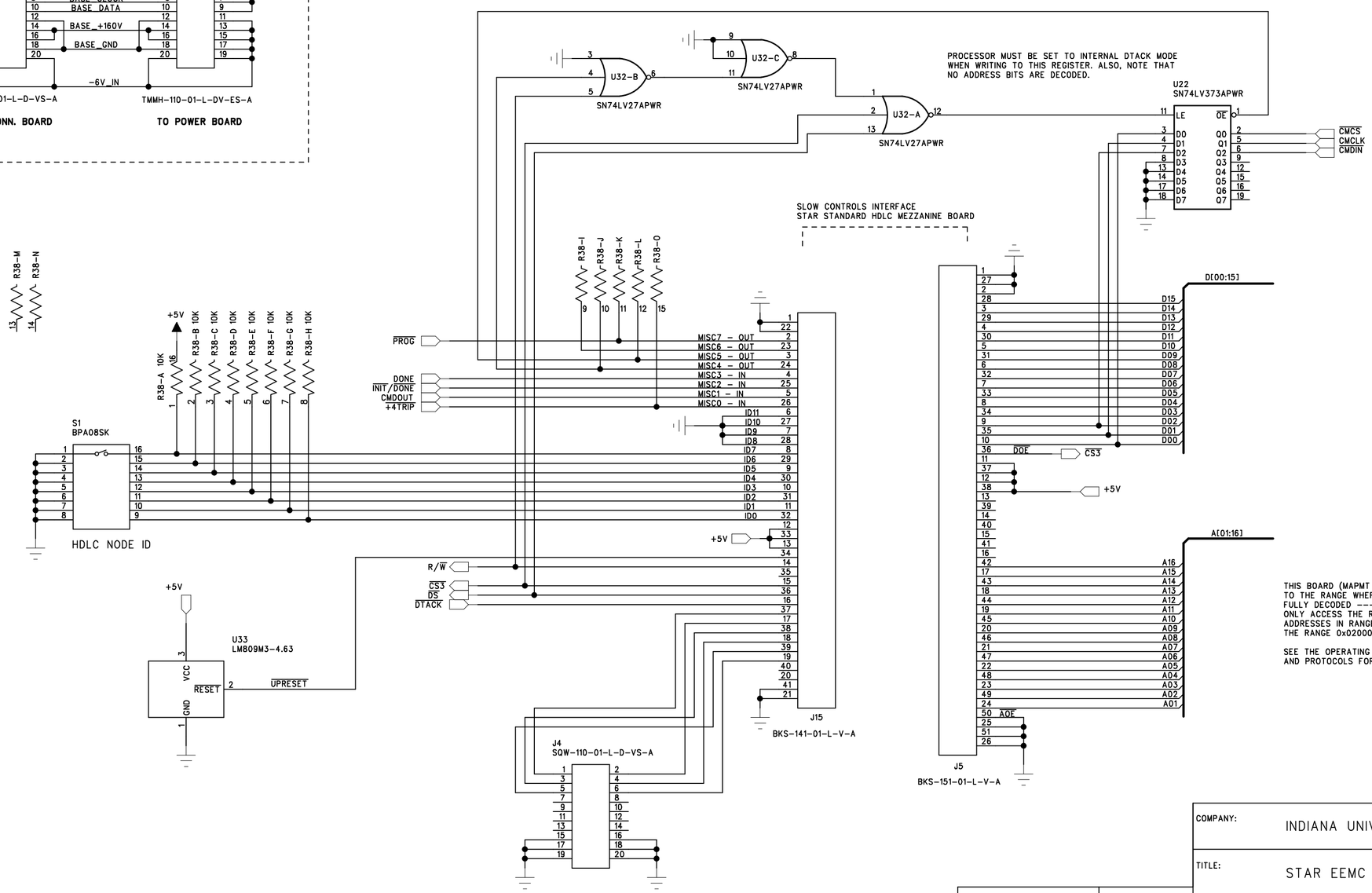

THIS BOARD (MAPMT READOUT BOARD) RESPONDS ONLY TO THE RANGE WHERE $\overline{CS3}$ IS ACTIVE. ADDRESSES ARE NOT FULLY DECODED --- SOFTWARE SHOULD ONLY ACCESS THE RANGE 0x020000 TO 0x03FFFE. ADDRESSES IN RANGE 0x040000 TO 0x0FFFFE OVERLAY THE RANGE 0x020000 TO 0x03FFFE SEVEN MORE TIMES.

SEE THE OPERATING SPECIFICATIONS FOR ADDRESS MAP AND PROTOCOLS FOR CONTROLLING MAPMT READOUT

DRAWN: D. FORD, M. STONECIPHER, G. VISSER	DATED: 28 APR 03	COMPANY: INDIANA UNIVERSITY CYCLOTRON FACILITY	
CHECKED:	DATED:	TITLE: STAR EEMC MAPMT READOUT BOARD POWER INPUT, HDLC MEZZANINE BOARD	
QUALITY CONTROL:	DATED:	CODE: / SIZE: / DRAWING NO: XXXX	REV: 1
RELEASED:	DATED:	SCALE:	SHEET: 1 OF 10

REVISION RECORD			
LTR	ECO NO:	APPROVED:	DATE:

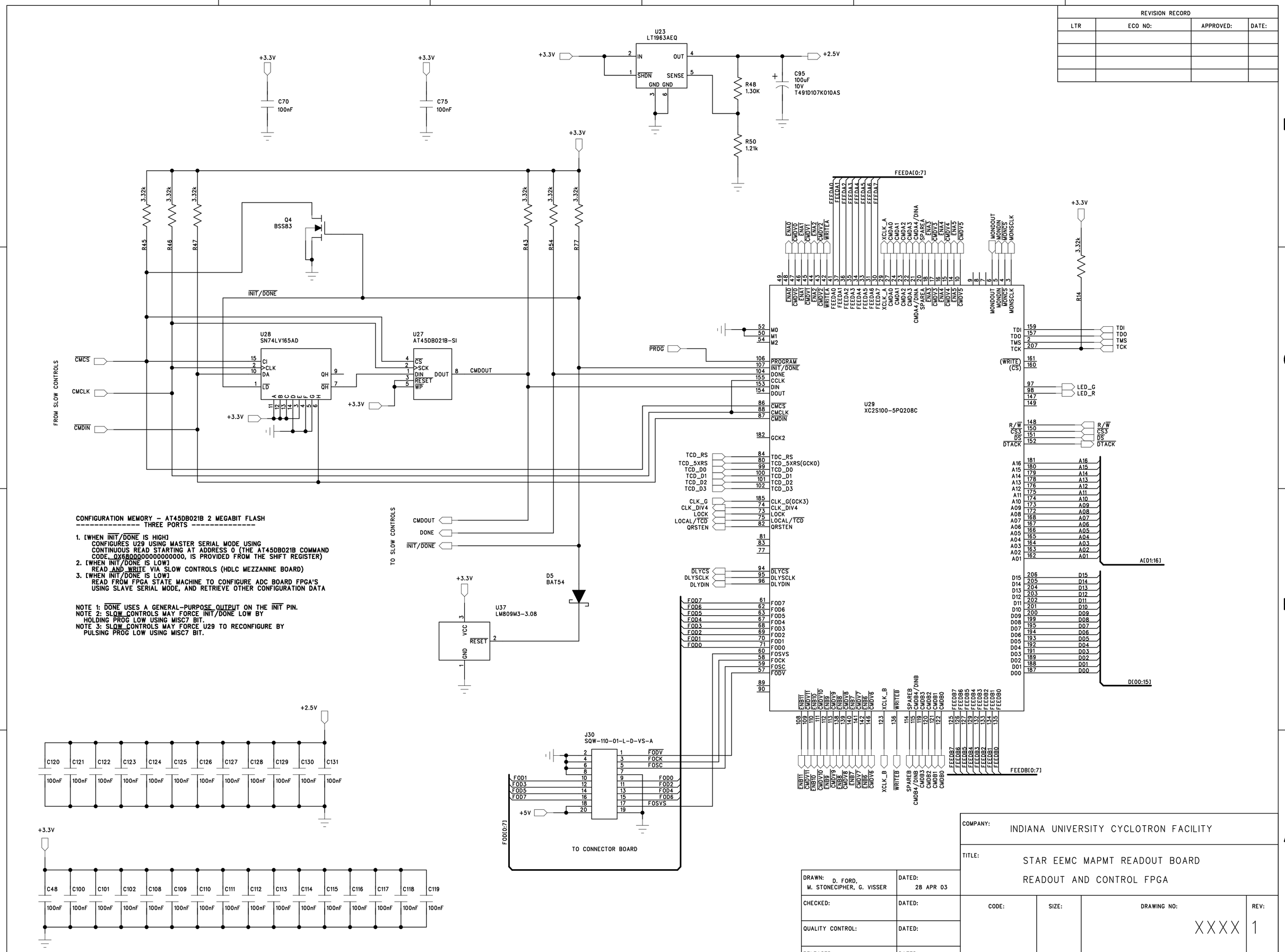

CONFIGURATION MEMORY – AT45DB021B 2 MEGABIT FLASH
---------- THREE PORTS ----------

1. [WHEN INIT/DONE IS HIGH]
   CONFIGURES U29 USING MASTER SERIAL MODE USING
   CONTINUOUS READ STARTING AT ADDRESS 0 (THE AT45DB021B COMMAND
   CODE, 0X6800000000000000, IS PROVIDED FROM THE SHIFT REGISTER)
2. [WHEN INIT/DONE IS LOW]
   READ AND WRITE VIA SLOW CONTROLS (HDLC MEZZANINE BOARD)
3. [WHEN INIT/DONE IS LOW]
   READ FROM FPGA STATE MACHINE TO CONFIGURE ADC BOARD FPGA'S
   USING SLAVE SERIAL MODE, AND RETRIEVE OTHER CONFIGURATION DATA

NOTE 1: DONE USES A GENERAL-PURPOSE OUTPUT ON THE INIT PIN.
NOTE 2: SLOW CONTROLS MAY FORCE INIT/DONE LOW BY
  HOLDING PROG LOW USING MISC7 BIT.
NOTE 3: SLOW CONTROLS MAY FORCE U29 TO RECONFIGURE BY
  PULSING PROG LOW USING MISC7 BIT.

DRAWN: D. FORD, M. STONECIPHER, G. VISSER	DATED: 28 APR 03	COMPANY: INDIANA UNIVERSITY CYCLOTRON FACILITY	
CHECKED:	DATED:	TITLE: STAR EEMC MAPMT READOUT BOARD READOUT AND CONTROL FPGA	
QUALITY CONTROL:	DATED:	CODE: / SIZE: / DRAWING NO: XXXX	REV: 1
RELEASED:	DATED:	SCALE:	SHEET: 2 OF 10

REVISION RECORD			
LTR	ECO NO:	APPROVED:	DATE:

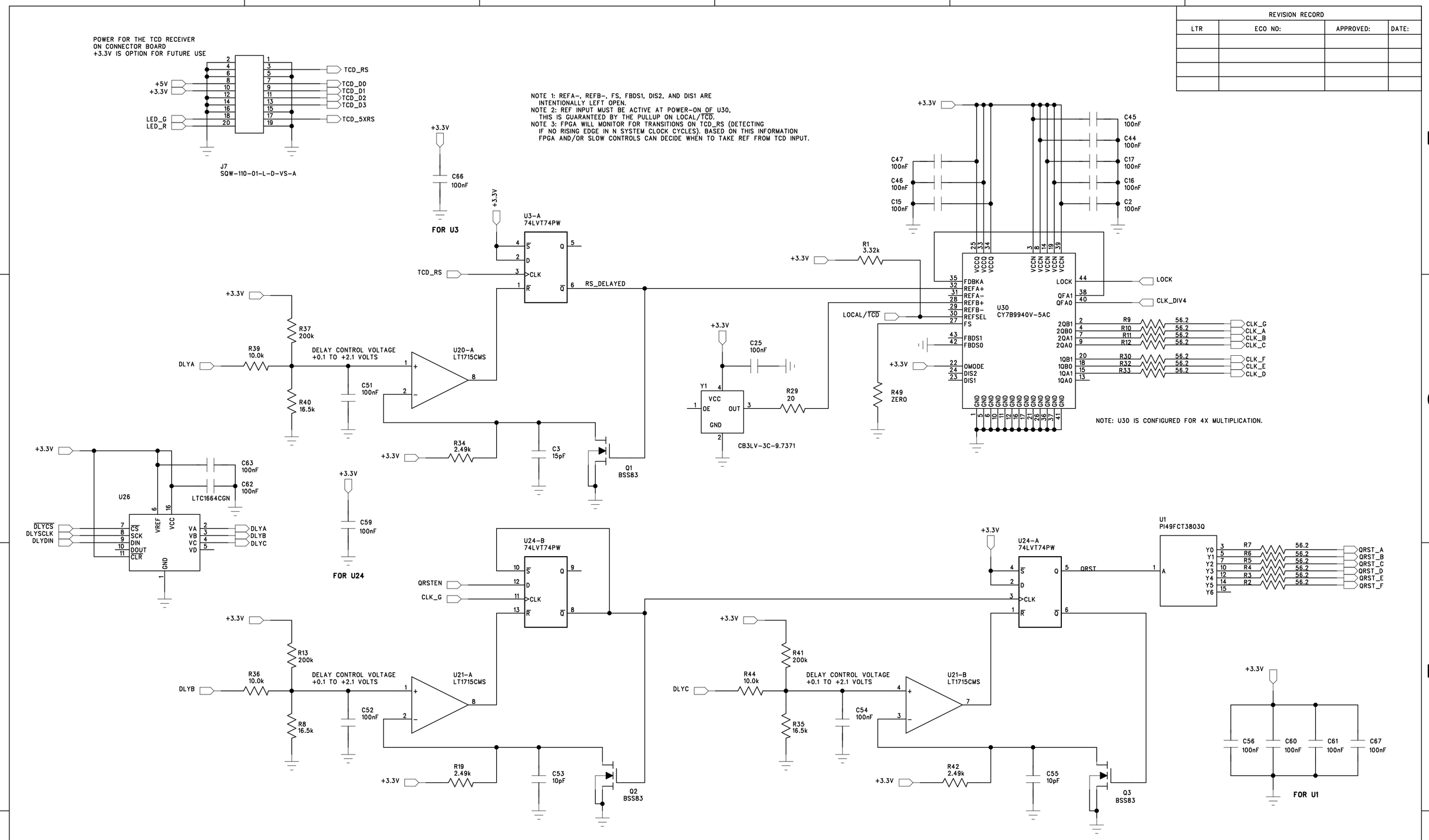

DRAWN: D. FORD, M. STONECIPHER, G. VISSER	DATED: 28 APR 03	COMPANY: INDIANA UNIVERSITY CYCLOTRON FACILITY	
CHECKED:	DATED:	TITLE: STAR EEMC MAPMT READOUT BOARD CLOCK AND RESET TIMING	
QUALITY CONTROL:	DATED:	CODE: / SIZE: / DRAWING NO: XXXX	REV: 1
RELEASED:	DATED:	SCALE:	SHEET: 3 OF 10

REVISION RECORD			
LTR	ECO NO:	APPROVED:	DATE:

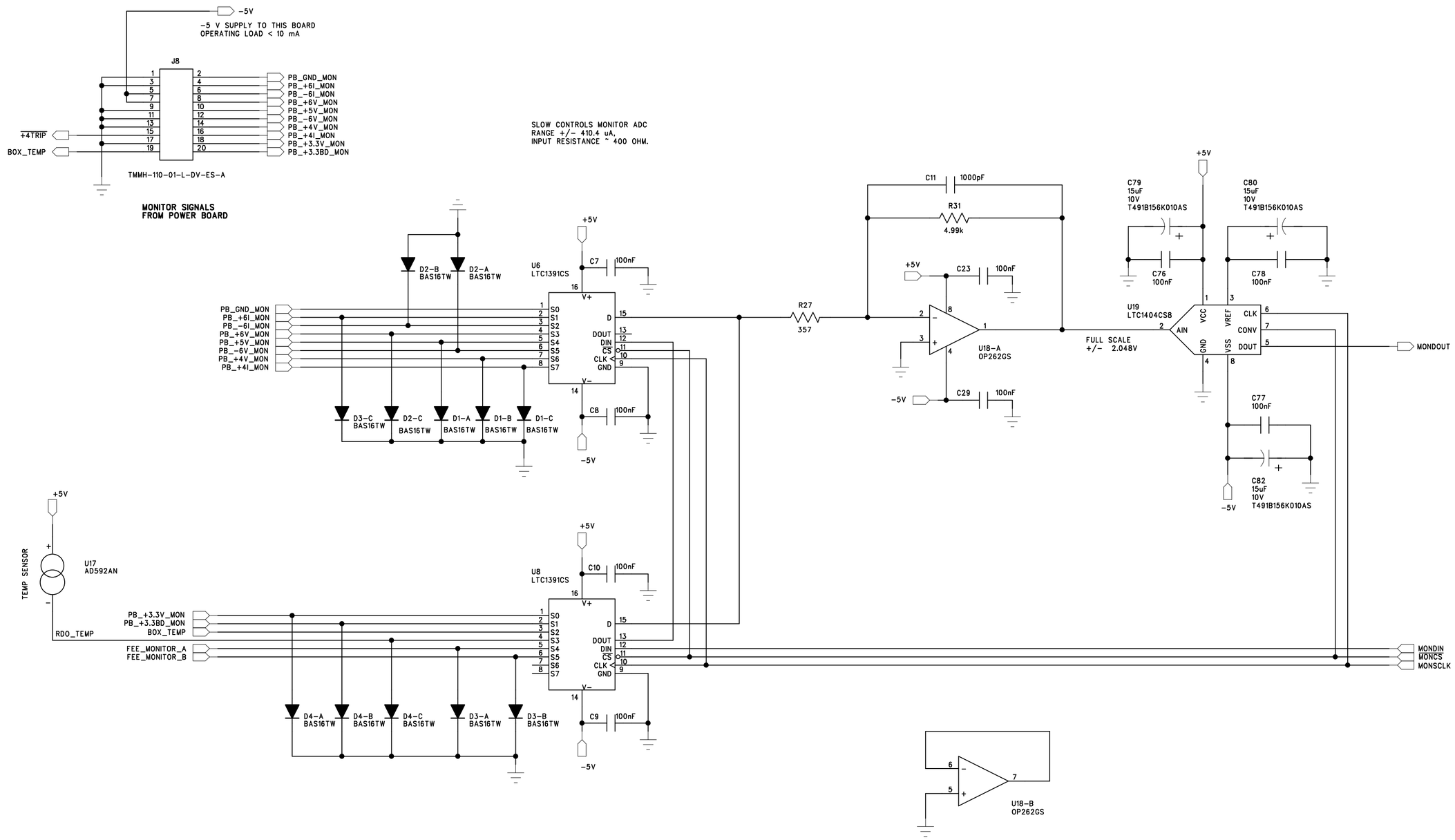

COMPANY:	INDIANA UNIVERSITY CYCLOTRON FACILITY		
TITLE:	STAR EEMC MAPMT READOUT BOARD SLOW CONTROLS MONITOR ADC		
DRAWN: D. FORD, M. STONECIPHER, G. VISSER	DATED: 28 APR 03	CODE:	SIZE:
CHECKED:	DATED:	DRAWING NO: XXXX	REV: 1
QUALITY CONTROL:	DATED:		
RELEASED:	DATED:	SCALE:	SHEET: 4 OF 10

REVISION RECORD			
LTR	ECO NO:	APPROVED:	DATE:

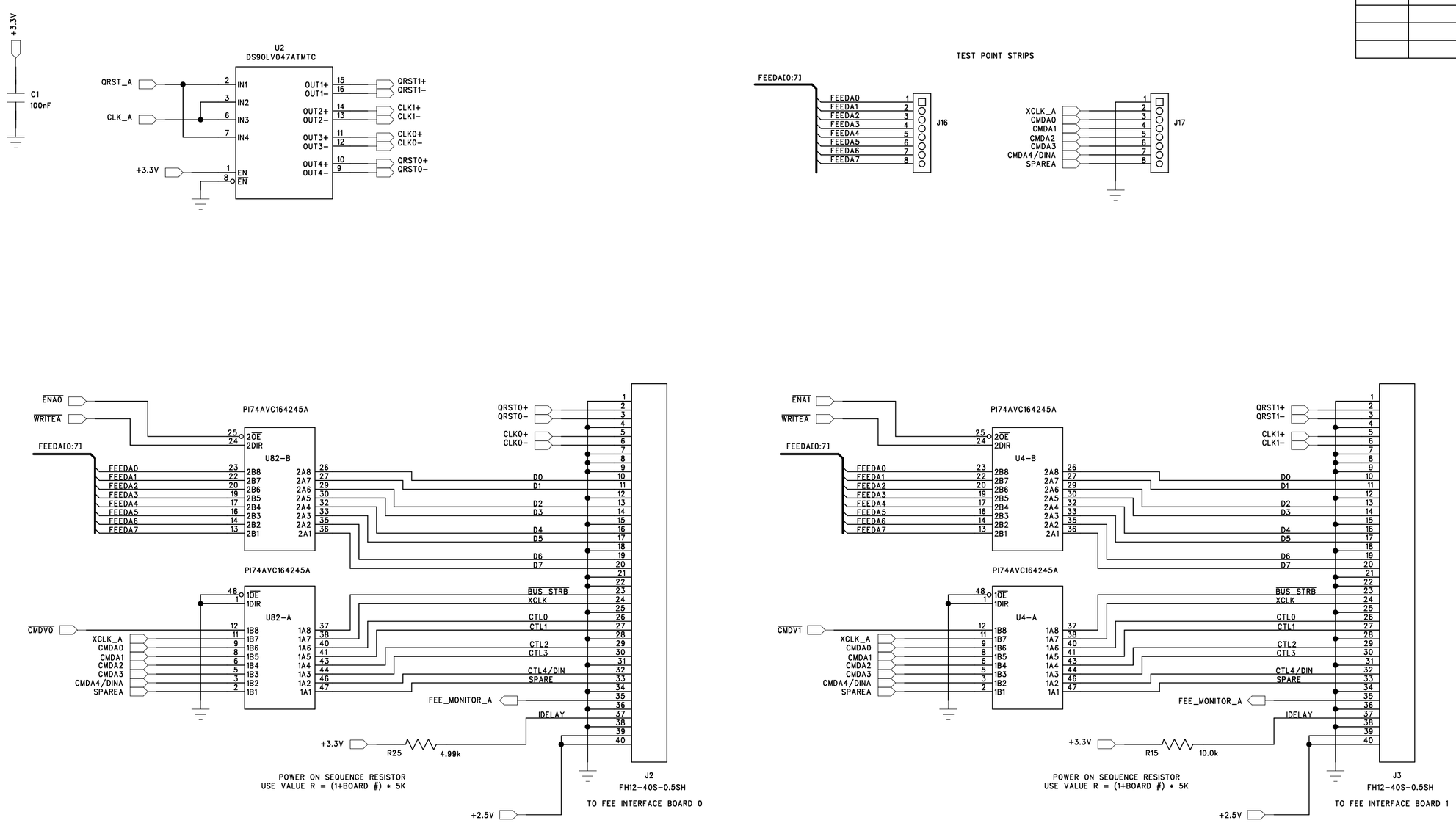

DRAWN: D. FORD, M. STONECIPHER, G. VISSER	DATED: 28 APR 03	COMPANY: INDIANA UNIVERSITY CYCLOTRON FACILITY	
CHECKED:	DATED:	TITLE: STAR EEMC MAPMT READOUT BOARD MAPMT / FEE ASSEMBLIES 0 AND 1	
QUALITY CONTROL:	DATED:	CODE: / SIZE: / DRAWING NO: XXXX	REV: 1
RELEASED:	DATED:	SCALE:	SHEET: 5 OF 10

REVISION RECORD			
LTR	ECO NO:	APPROVED:	DATE:

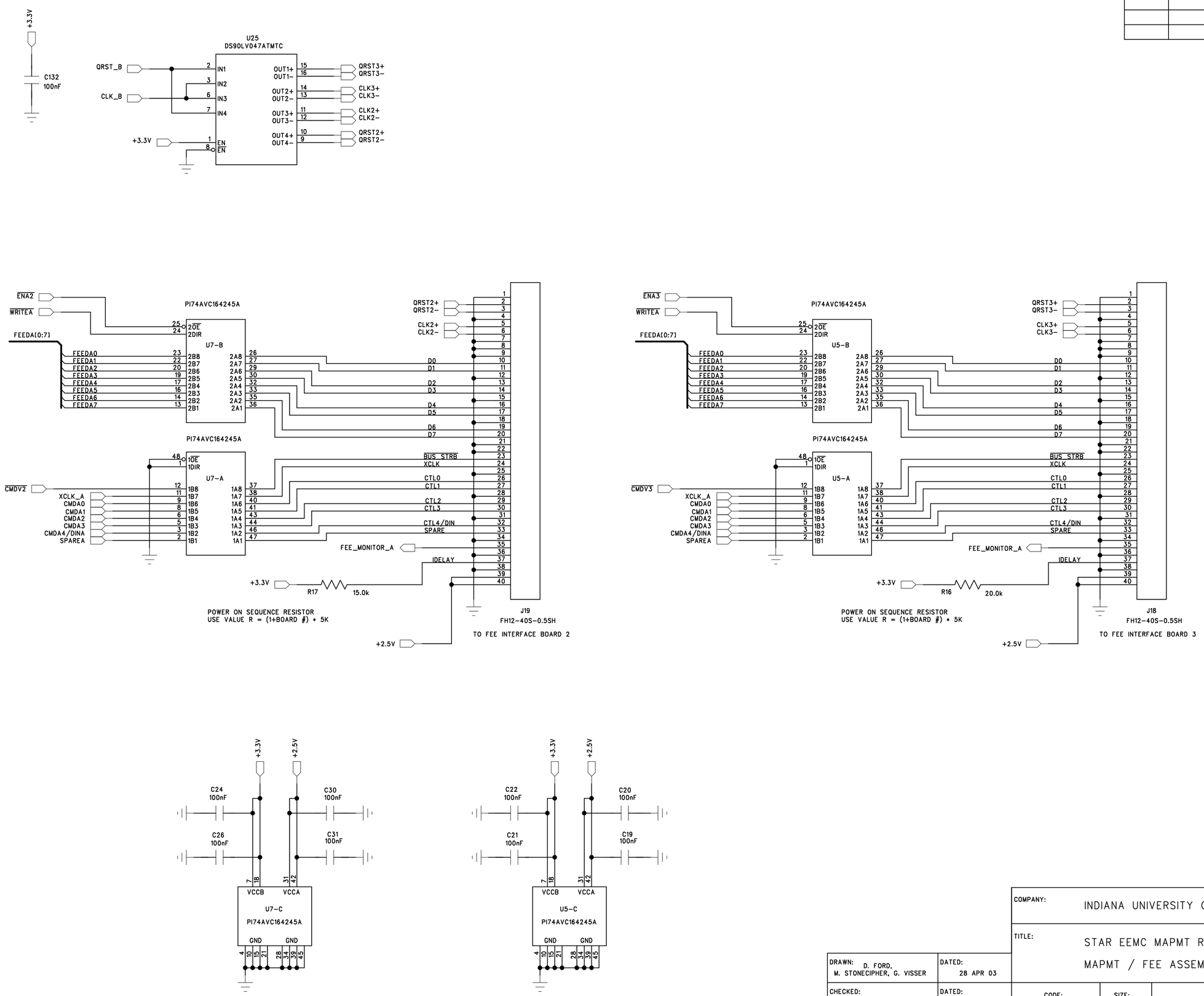

DRAWN: D. FORD, M. STONECIPHER, G. VISSER	DATED: 28 APR 03	COMPANY: INDIANA UNIVERSITY CYCLOTRON FACILITY	
CHECKED:	DATED:	TITLE: STAR EEMC MAPMT READOUT BOARD MAPMT / FEE ASSEMBLIES 2 AND 3	
QUALITY CONTROL:	DATED:	CODE: / SIZE: / DRAWING NO: XXXX	REV: 1
RELEASED:	DATED:	SCALE:	SHEET: 6 OF 10

REVISION RECORD			
LTR	ECO NO:	APPROVED:	DATE:

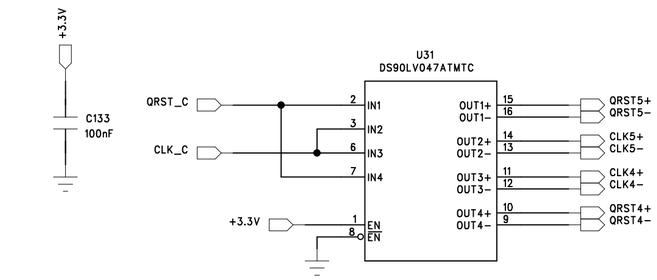

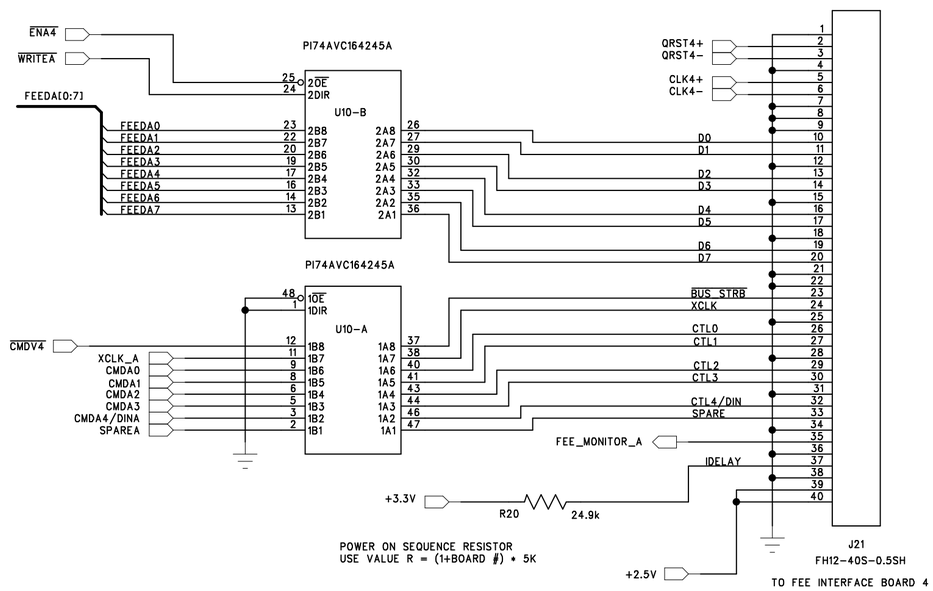

POWER ON SEQUENCE RESISTOR
USE VALUE R = (1+BOARD #) * 5K

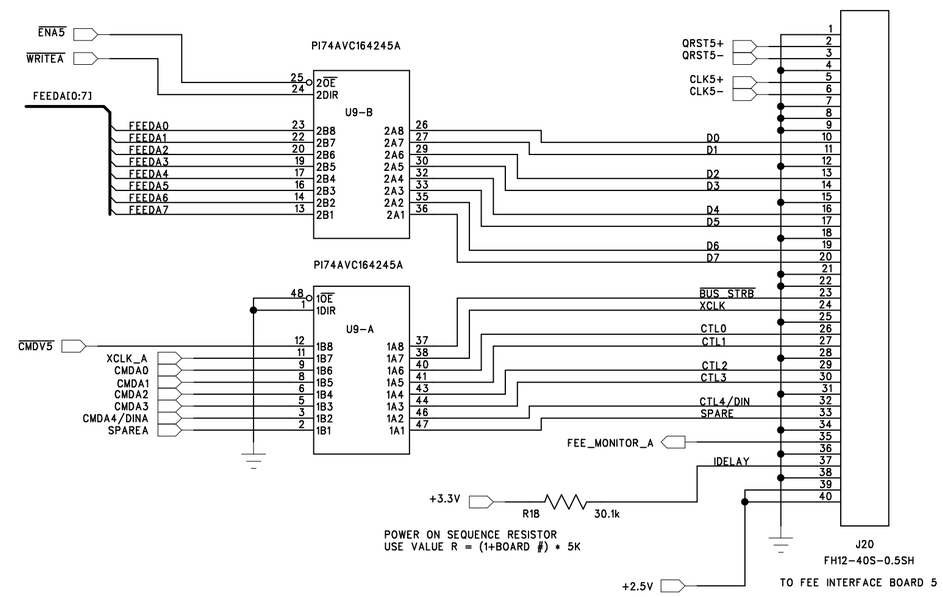

POWER ON SEQUENCE RESISTOR
USE VALUE R = (1+BOARD #) * 5K

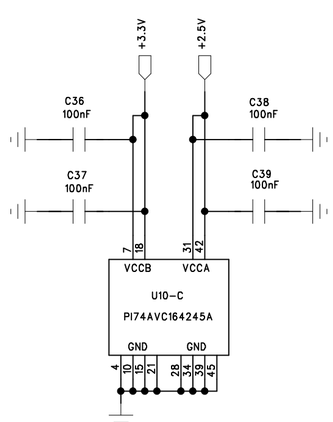

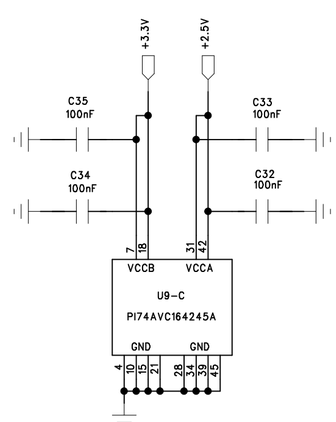

DRAWN: D. FORD, M. STONECIPHER, G. VISSER	DATED: 28 APR 03	COMPANY: INDIANA UNIVERSITY CYCLOTRON FACILITY		
CHECKED:	DATED:	TITLE: STAR EEMC MAPMT READOUT BOARD MAPMT / FEE ASSEMBLIES 4 AND 5		
QUALITY CONTROL:	DATED:	CODE:	SIZE:	DRAWING NO: XXXX — REV: 1
RELEASED:	DATED:	SCALE:		SHEET: 7 OF 10

REVISION RECORD			
LTR	ECO NO:	APPROVED:	DATE:

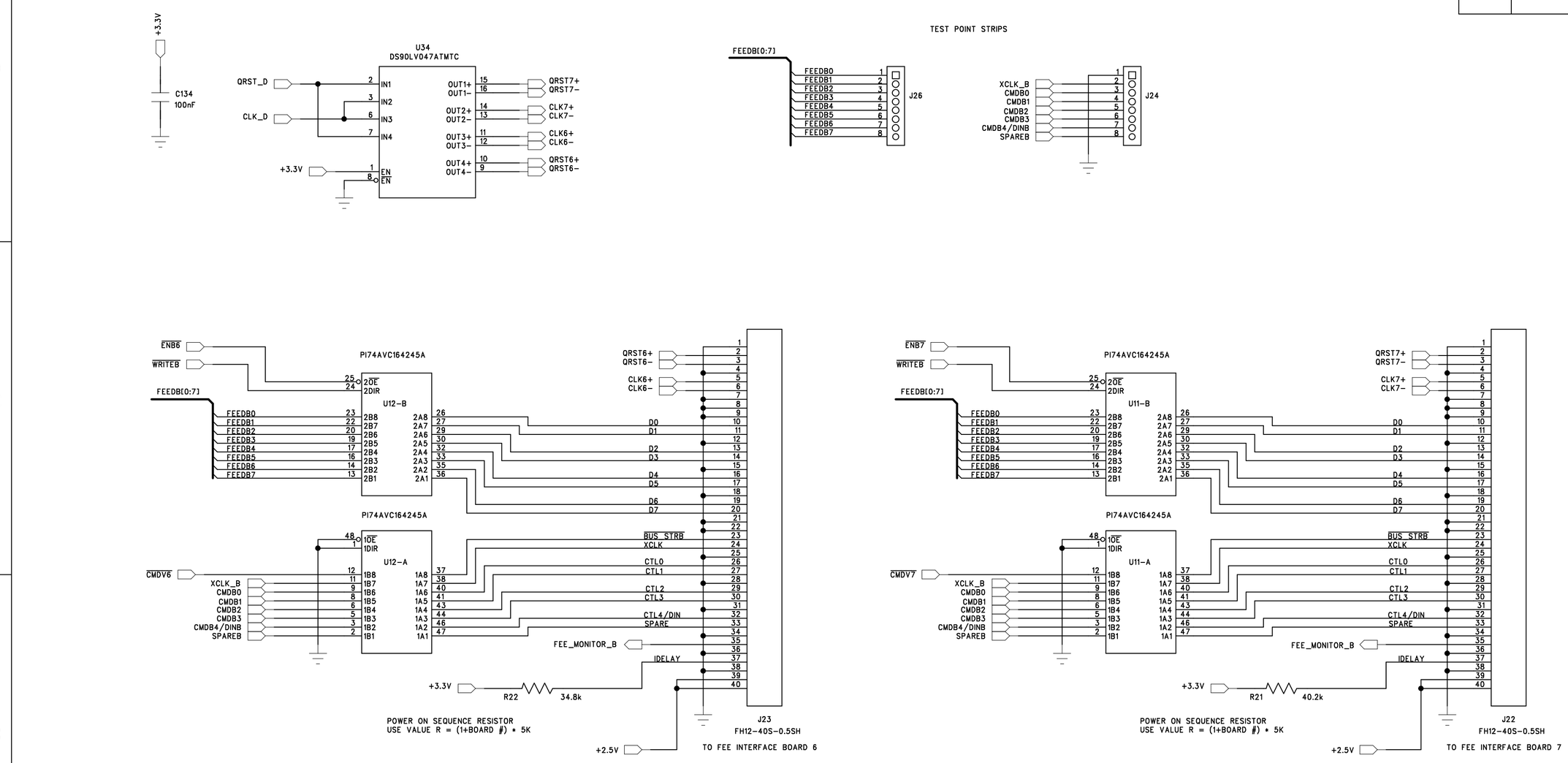

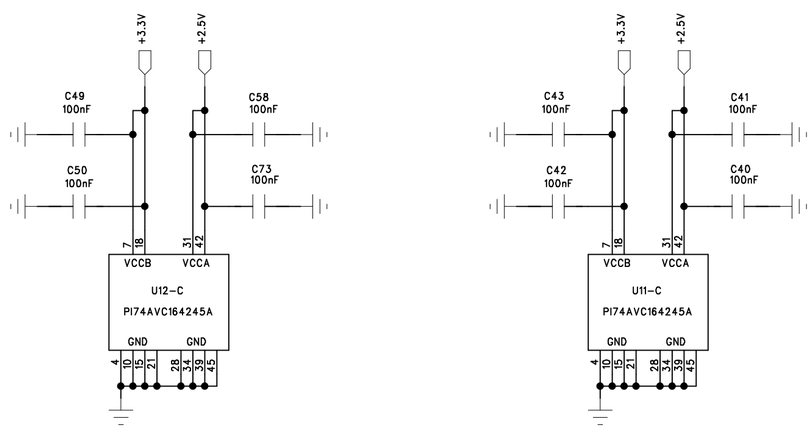

DRAWN: D. FORD, M. STONECIPHER, G. VISSER	DATED: 28 APR 03	COMPANY: INDIANA UNIVERSITY CYCLOTRON FACILITY	
CHECKED:	DATED:	TITLE: STAR EEMC MAPMT READOUT BOARD MAPMT / FEE ASSEMBLIES 6 AND 7	
QUALITY CONTROL:	DATED:	CODE:	SIZE:
RELEASED:	DATED:	DRAWING NO: XXXX	REV: 1
		SCALE:	SHEET: 8 OF 10

REVISION RECORD			
LTR	ECO NO:	APPROVED:	DATE:

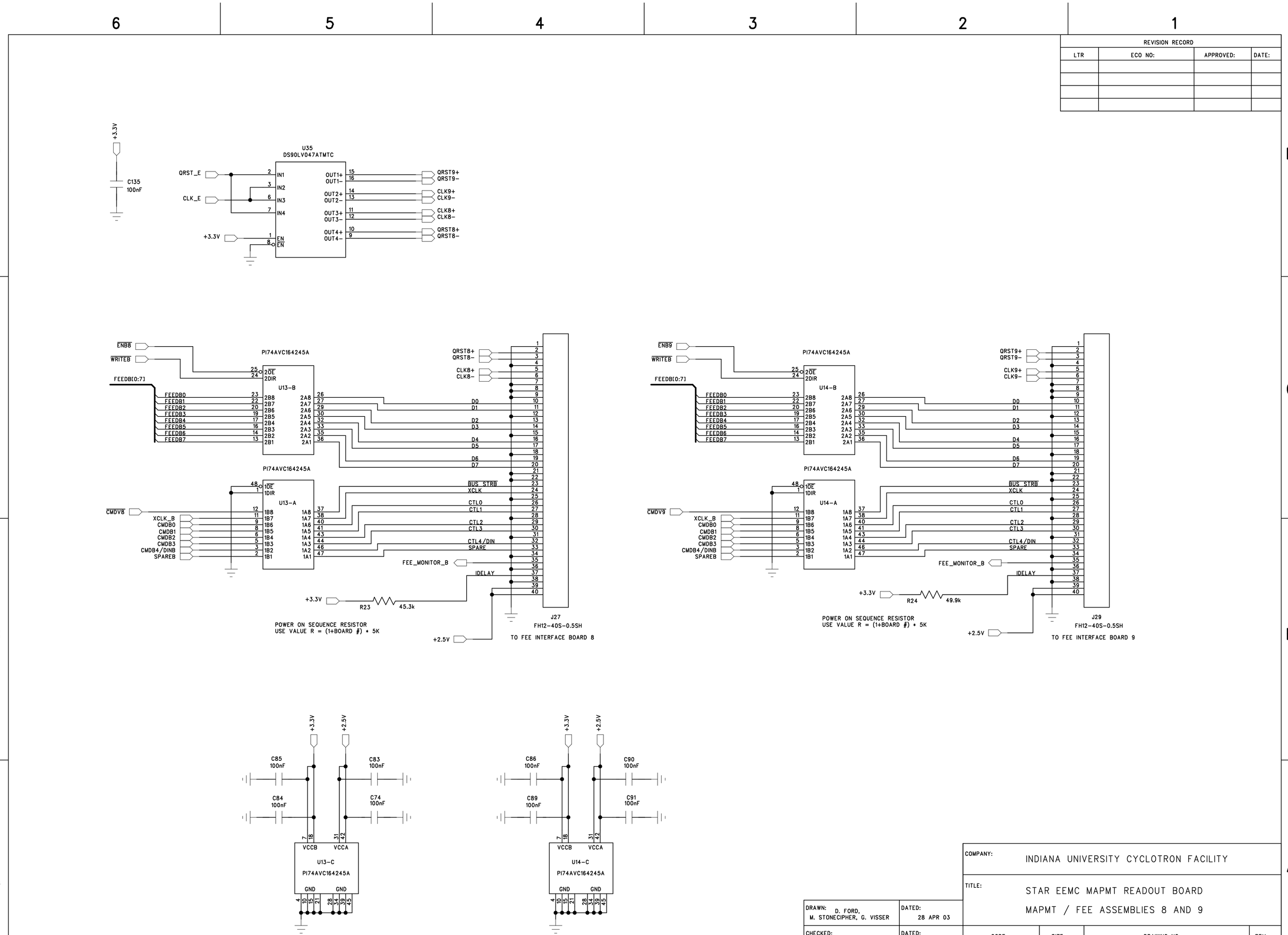

DRAWN: D. FORD, M. STONECIPHER, G. VISSER	DATED: 28 APR 03	COMPANY: INDIANA UNIVERSITY CYCLOTRON FACILITY	
CHECKED:	DATED:	TITLE: STAR EEMC MAPMT READOUT BOARD MAPMT / FEE ASSEMBLIES 8 AND 9	
QUALITY CONTROL:	DATED:	CODE: / SIZE: / DRAWING NO: XXXX	REV: 1
RELEASED:	DATED:	SCALE:	SHEET: 9 OF 10

REVISION RECORD			
LTR	ECO NO:	APPROVED:	DATE:

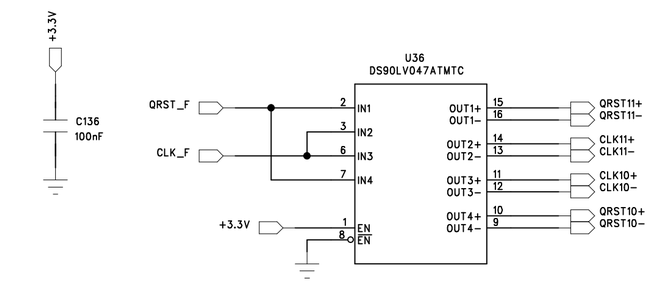

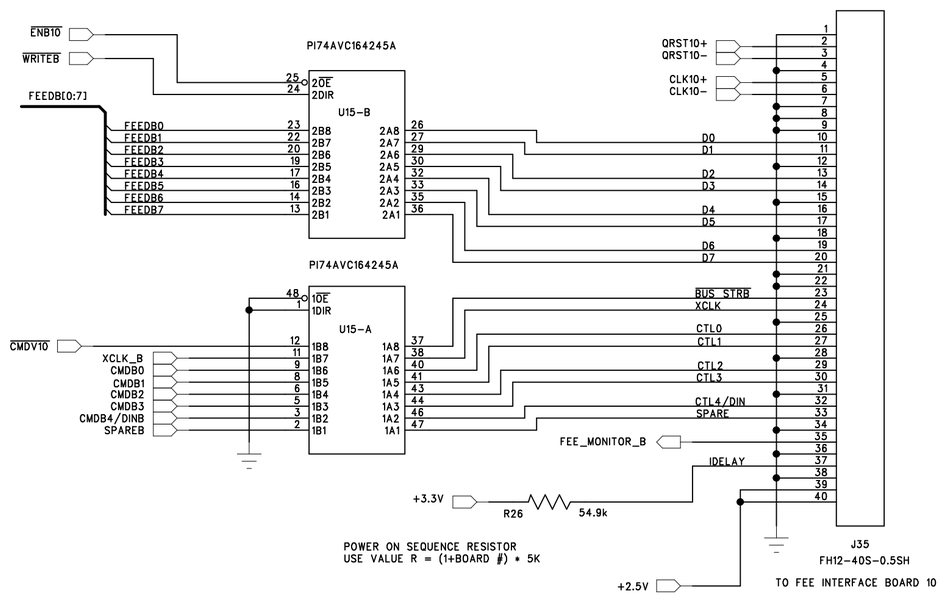

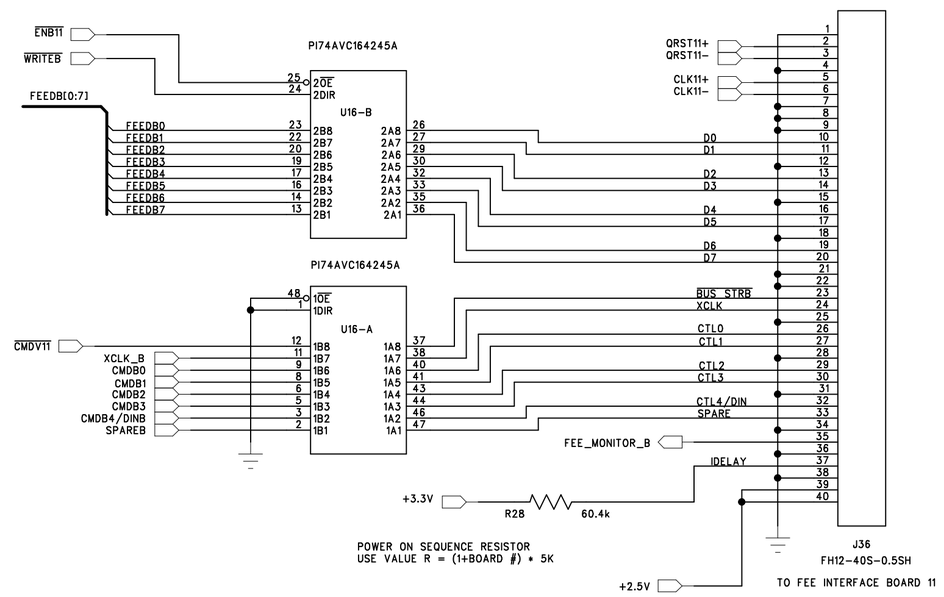

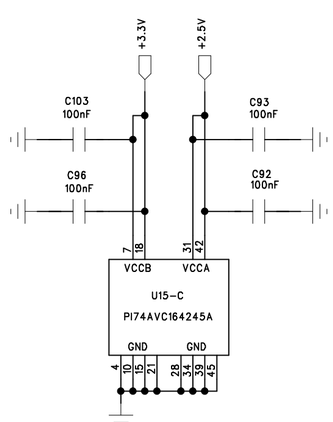

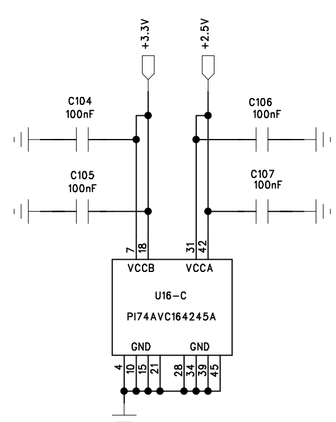

COMPANY: INDIANA UNIVERSITY CYCLOTRON FACILITY			
TITLE: STAR EEMC MAPMT READOUT BOARD MAPMT / FEE ASSEMBLIES 10 AND 11			
DRAWN: D. FORD, M. STONECIPHER, G. VISSER	DATED: 28 APR 03	CODE:	SIZE:
CHECKED:	DATED:	DRAWING NO: XXXX	REV: 1
QUALITY CONTROL:	DATED:		
RELEASED:	DATED:	SCALE:	SHEET: 10 OF 10