Status of the STAR tracking upgrade

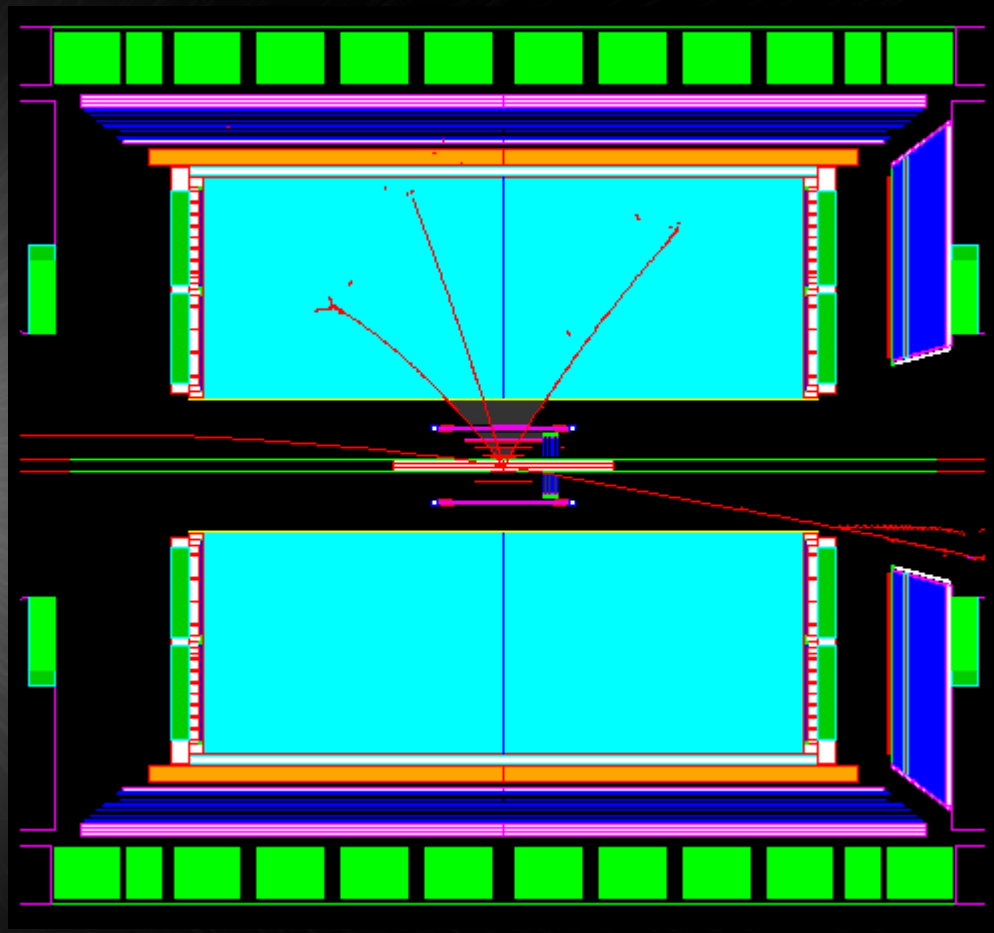

Gerrit van Nieuwenhuizen
STAR Collaboration Meeting
BNL, February 24, 2005

Physics

STAR pp/spin

Probing gluon polarization

Gluon contribution to the proton spin:

Inclusive- and di-jet production

Inclusive pi-zero production

Prompt photon production

Heavy-Flavor production

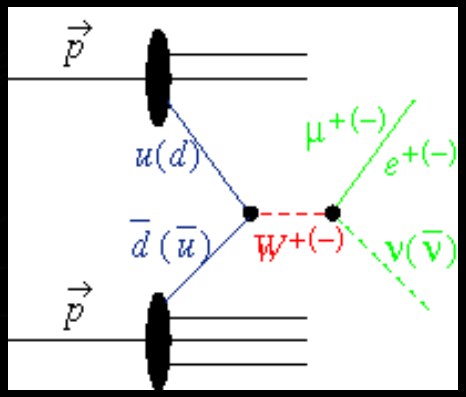

Flavor decomposition of quark and anti-quark polarization in W production

STAR Heavy-Ion

Heavy-Flavor physics

Spectra

Elliptic flow

Heavy-Flavor energy loss

Vector mesons

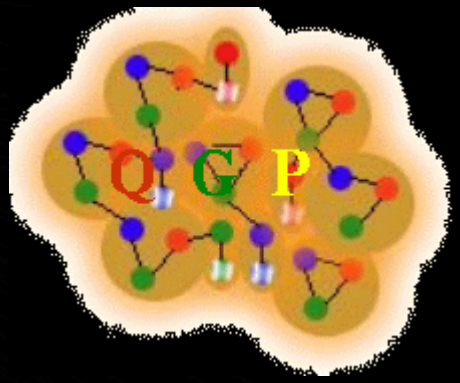

Tracker requirements

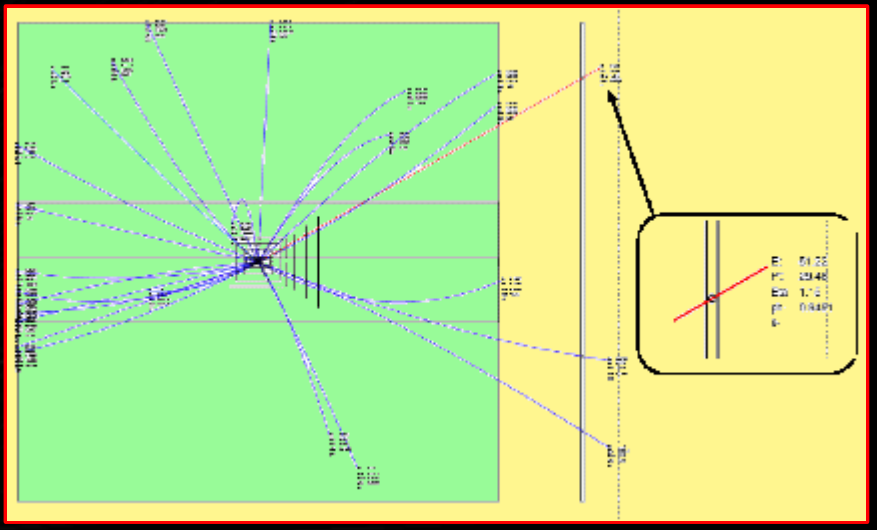

W production

Tracking in forward direction, 1<eta<2

e+/e- charge discrimination, sagitta ~2.5mm for Pt~30GeV/c

Fast detector and readout

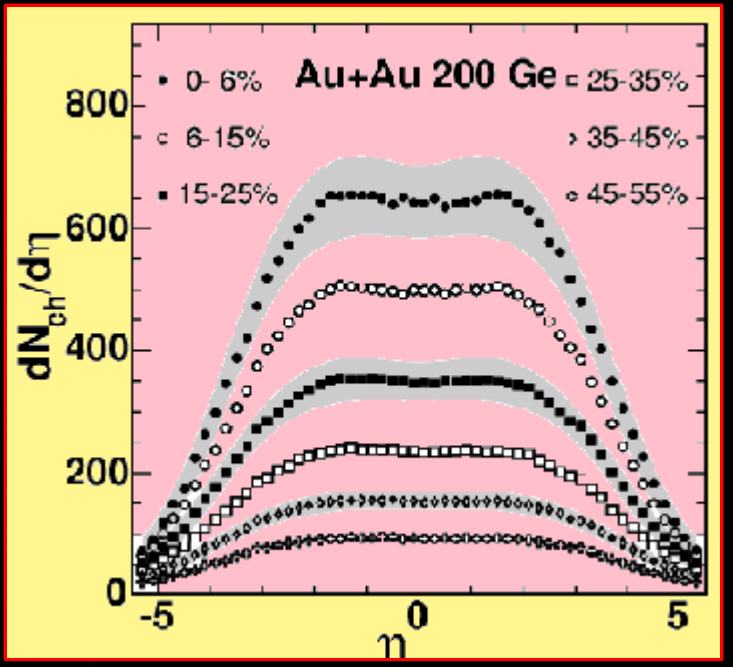

Heavy Ion program (& pp Heavy-Flavor)

High precision tracking

DCA resolution of ~20um

Low mass

Connect uvertex detector with TPC

Deal with overlapping events with high multiplicities

Required layout

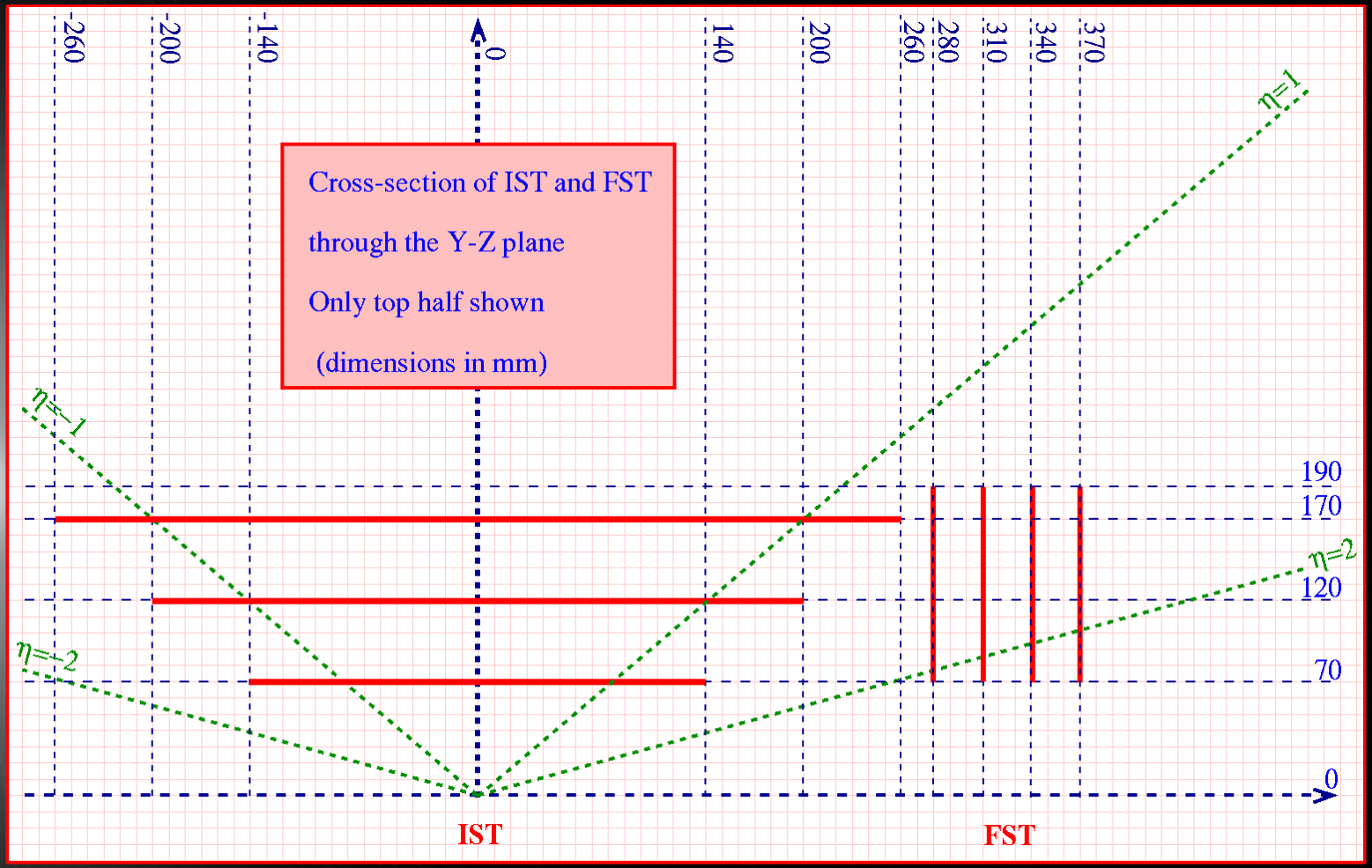

3 layer barrel & 4 forward disks of stereo angle silicon strip pairs
100% 3-hit efficiency for -5 < Zvertex < +5cm (for hermetic layers)
94% 3-hit efficiency for -10 < Zvertex < +10cm

Technology choices

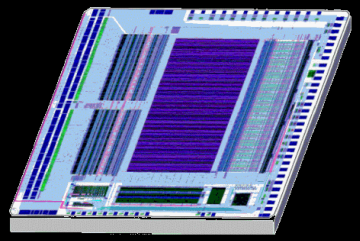

Conservative

Existing APV25-S1 readout chip (CMS)

Single sided ac-coupled silicon strip sensors (contact with Hamamatsu established)

Triple foil GEM detectors

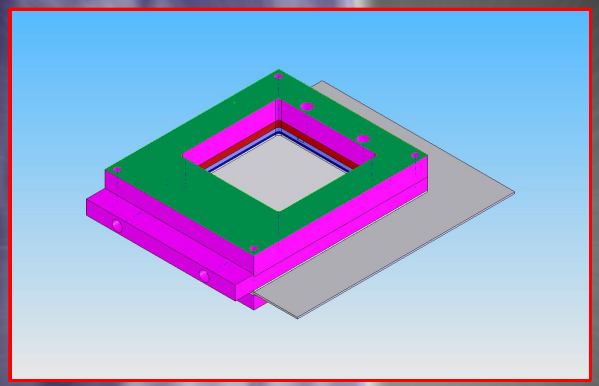

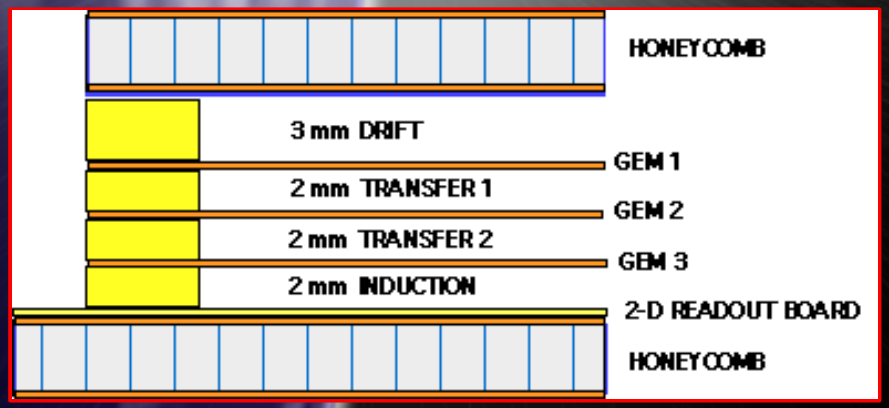

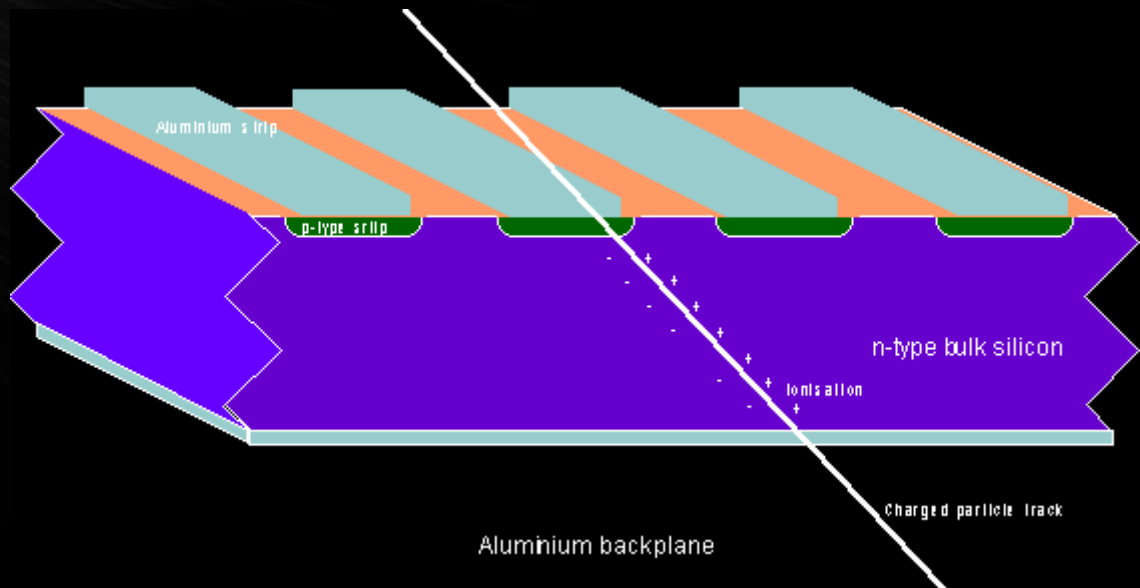

Status of mechanical design

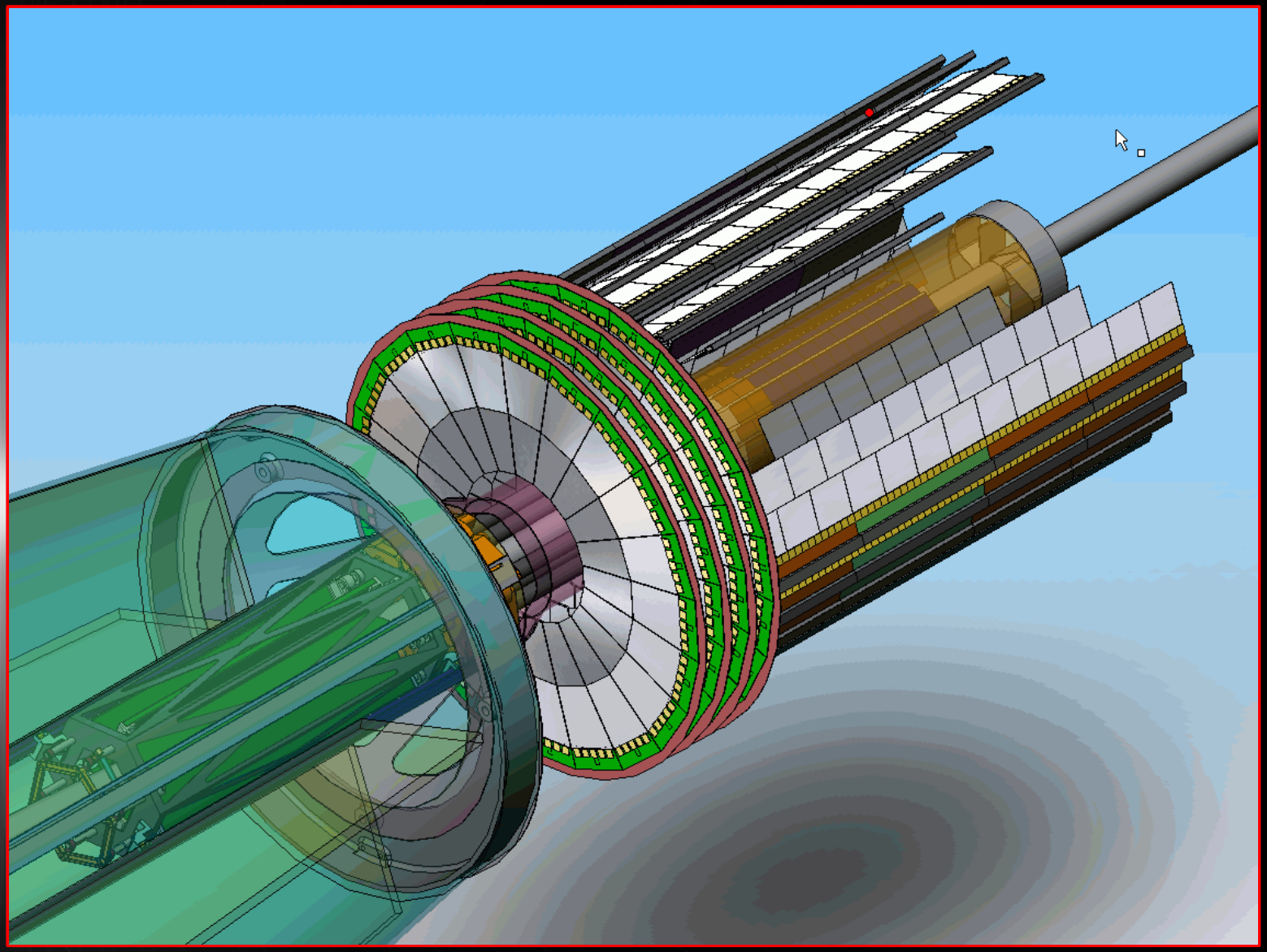

Jim Kelsey (Bates) working on mechanical integration

Inner Star/Silicon Tracker

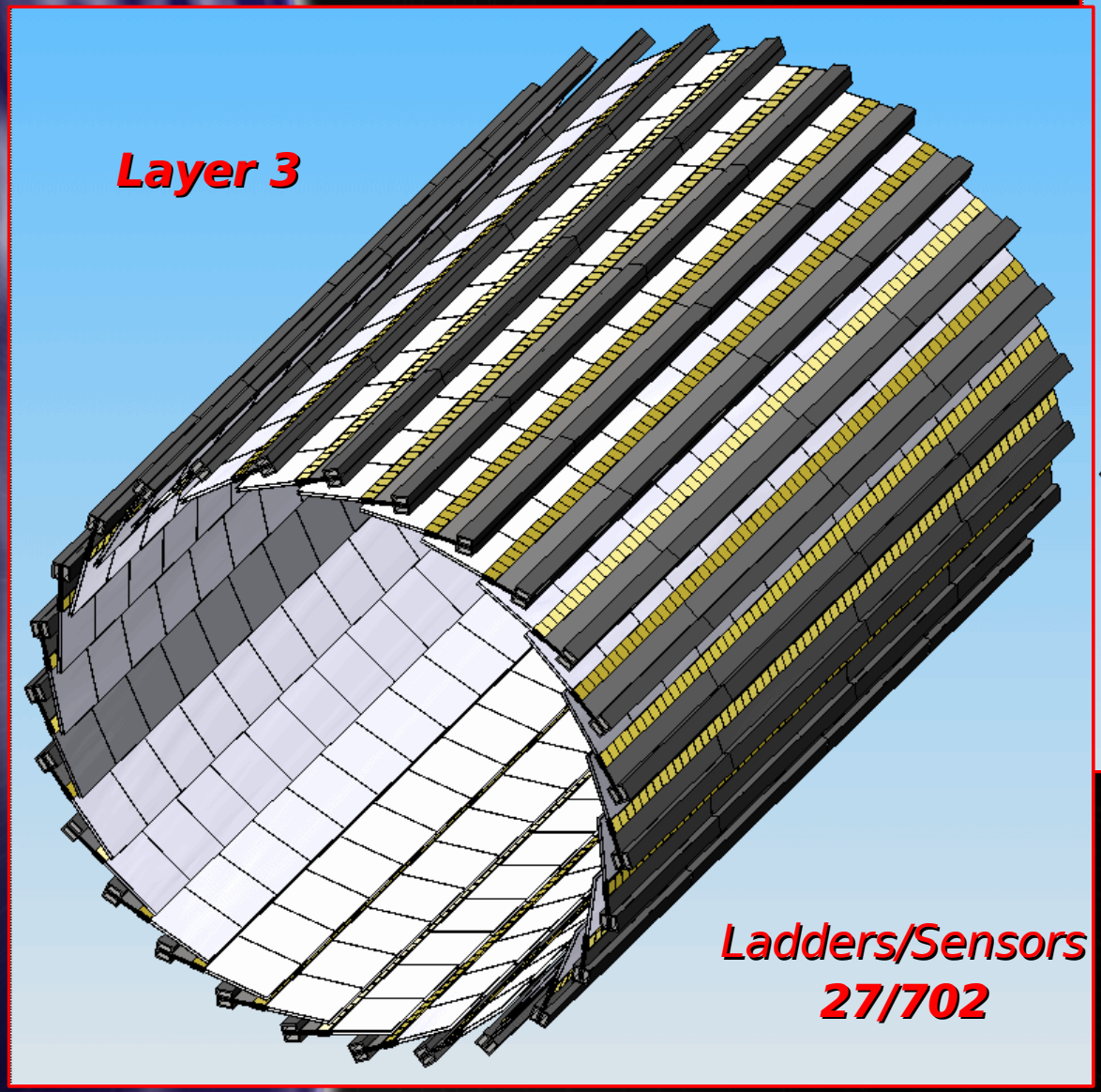

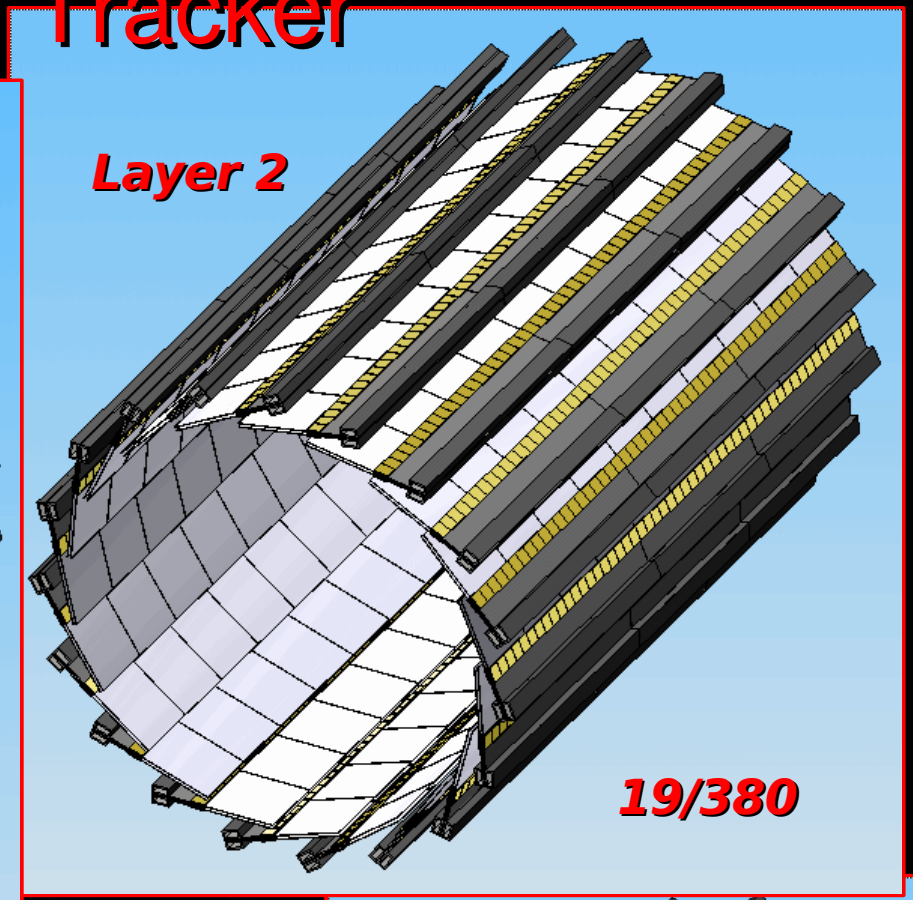

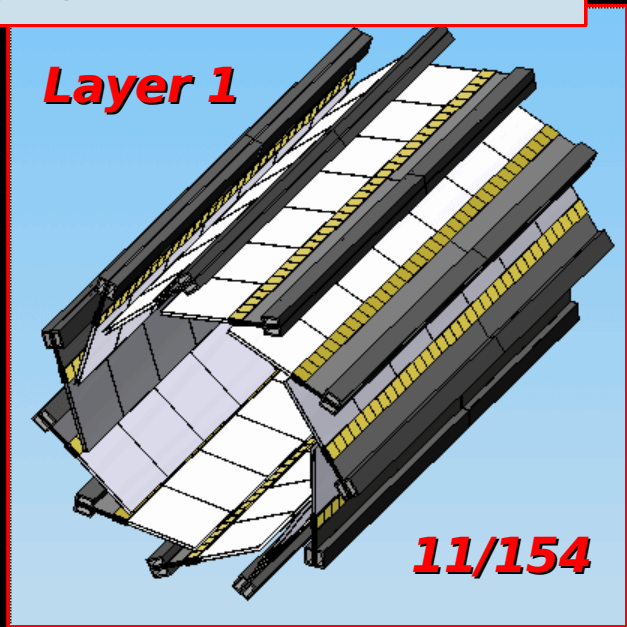

Using 40x40 mm^2 single sided silicon strip sensors arranged in stereo pairs

Forward Star/Silicon Tracker

4 disks
21 sectors per disk
4 sensors per sector
(stereo, back-to-back

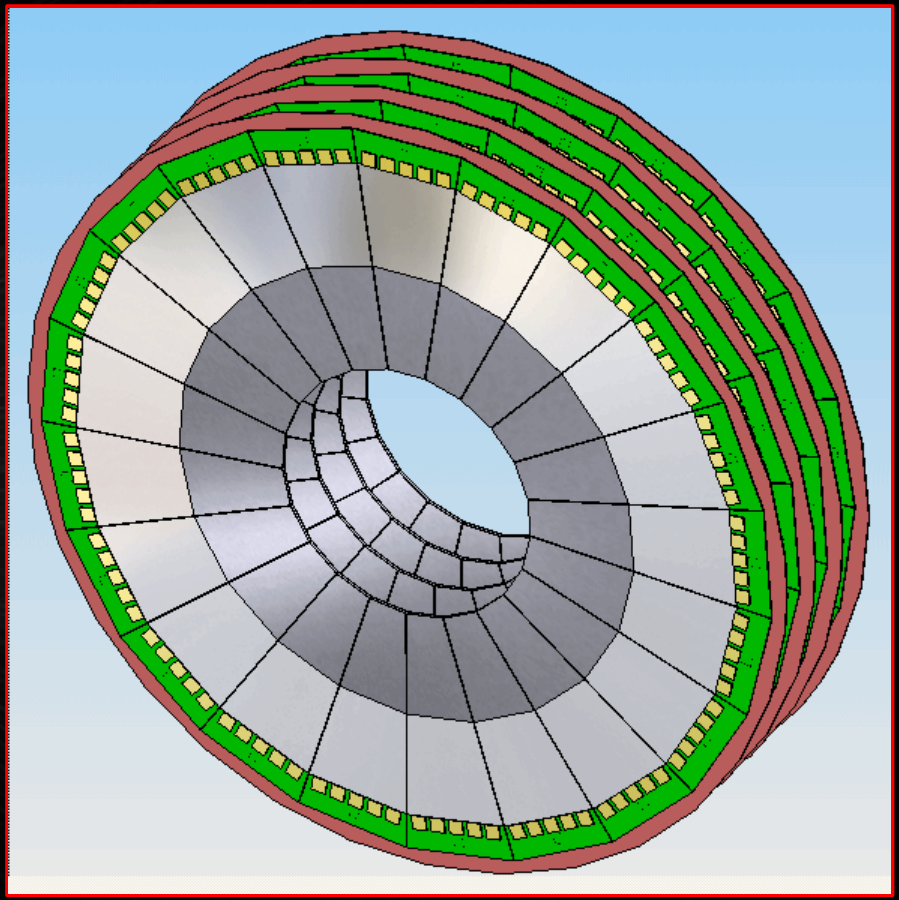

Heavy-Flavor Tracker

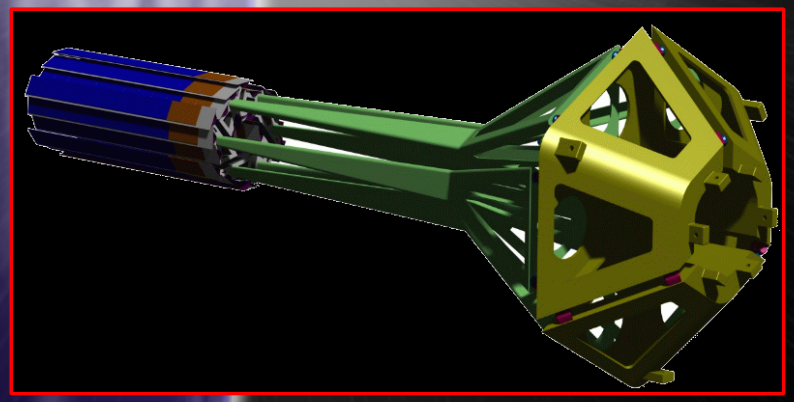

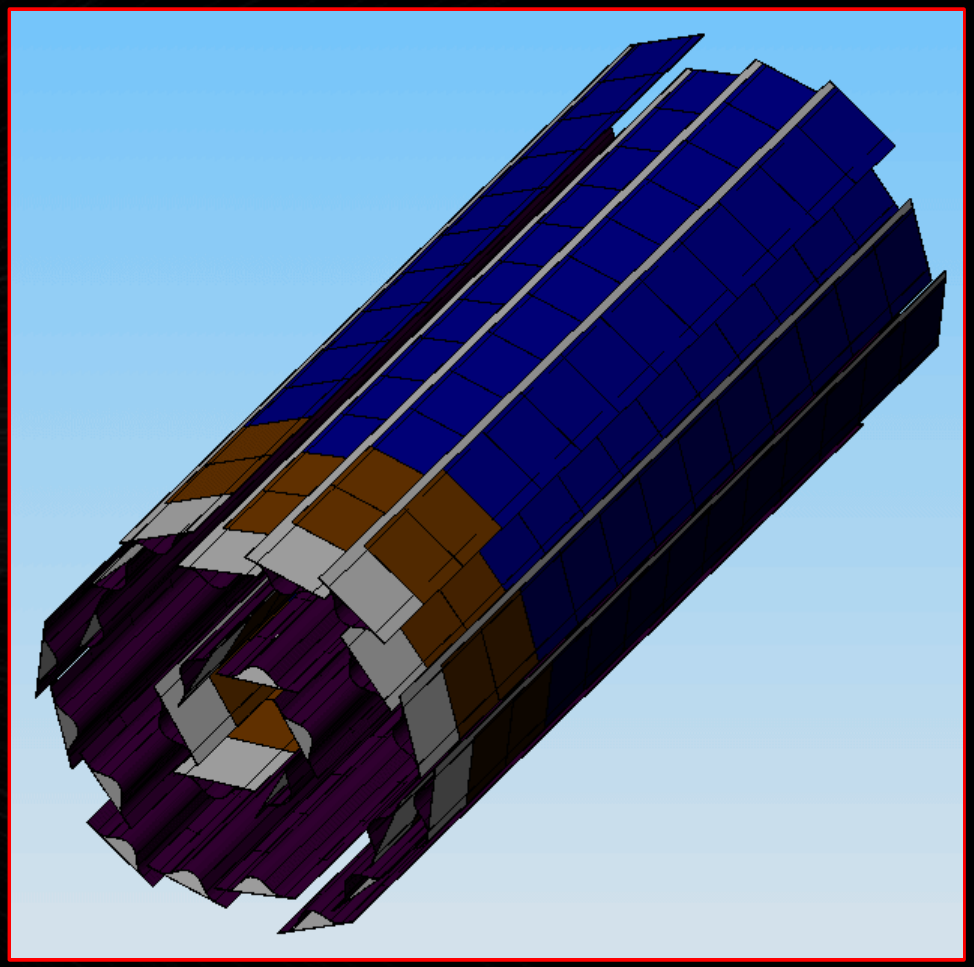

See Kai Schweda's talk

Forward GEM Tracker

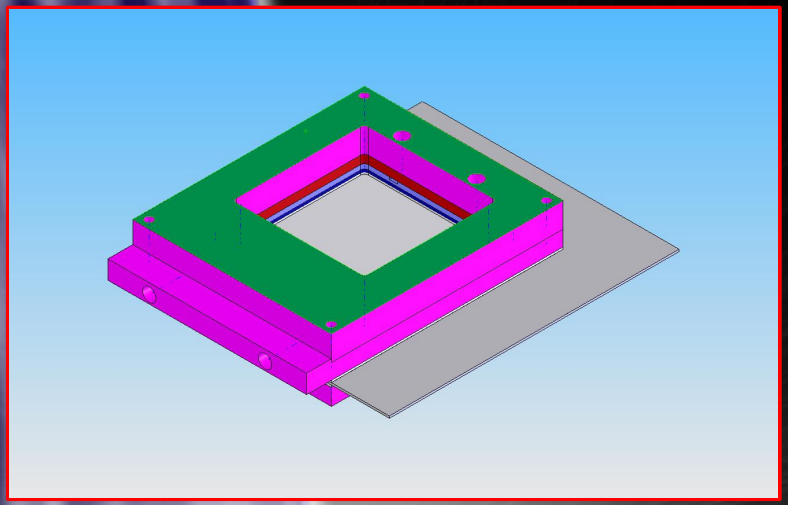

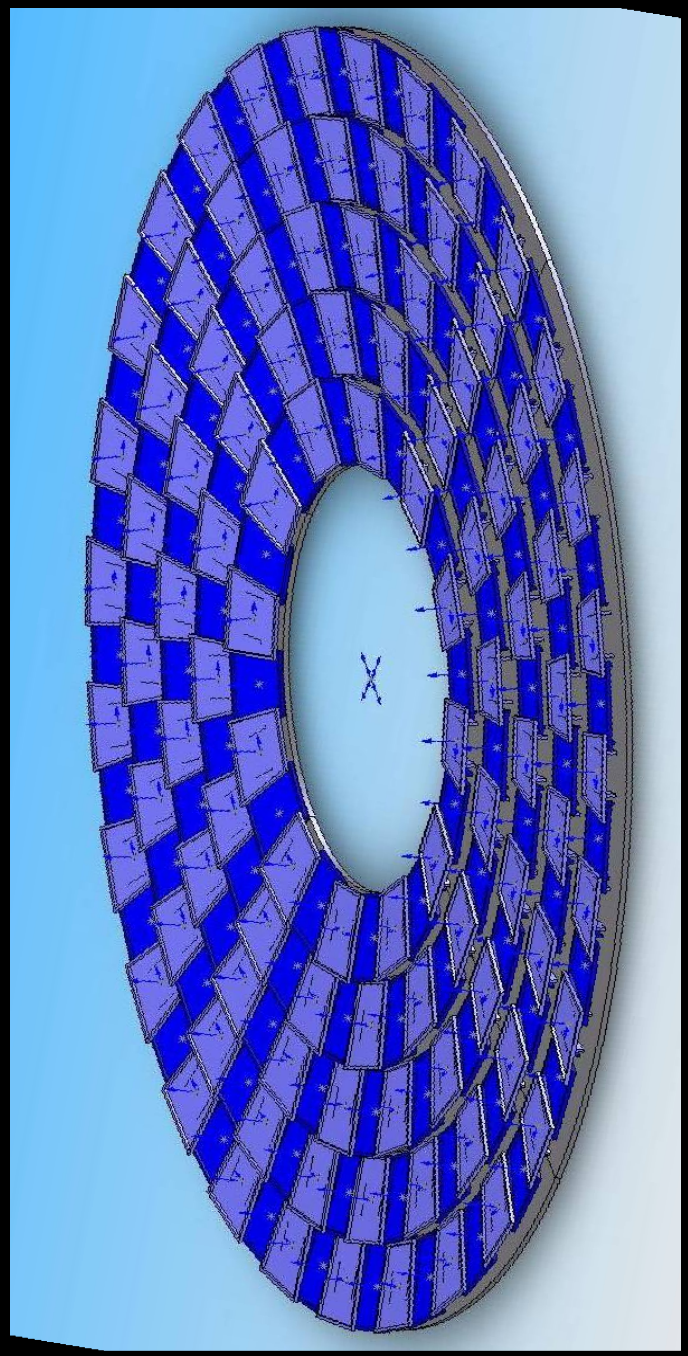

180 identical(!) triple GEM chambers

Mechanical design by Jim Kelsey (Bates)

See also Bernd Surrow's talk

Status of simulation geometry

HFT + IST fit inside the SSD

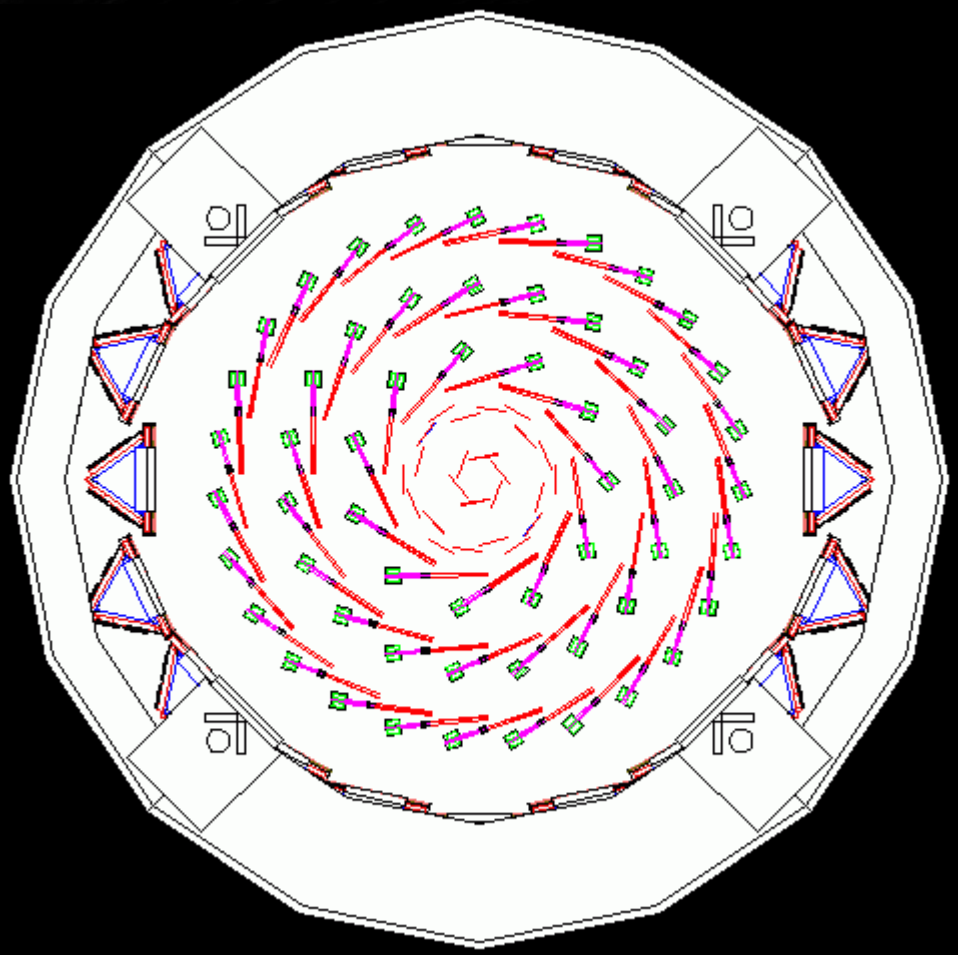

But the mechanical integration will take quite a bit of work

Status of simulation geometry

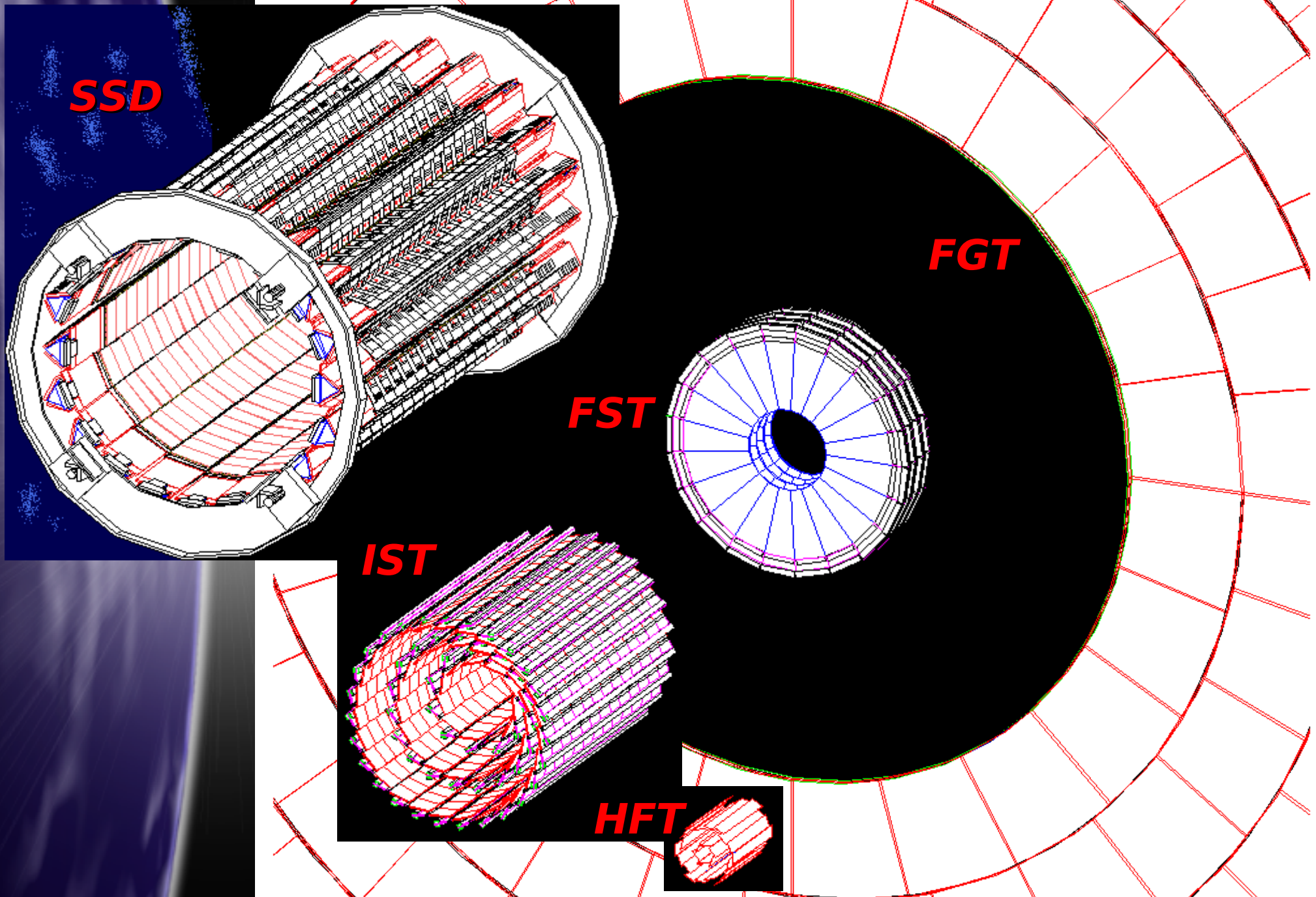

Original implementation by Maxim Potekhin

Simulation geometry SSD

Very complete implementation!

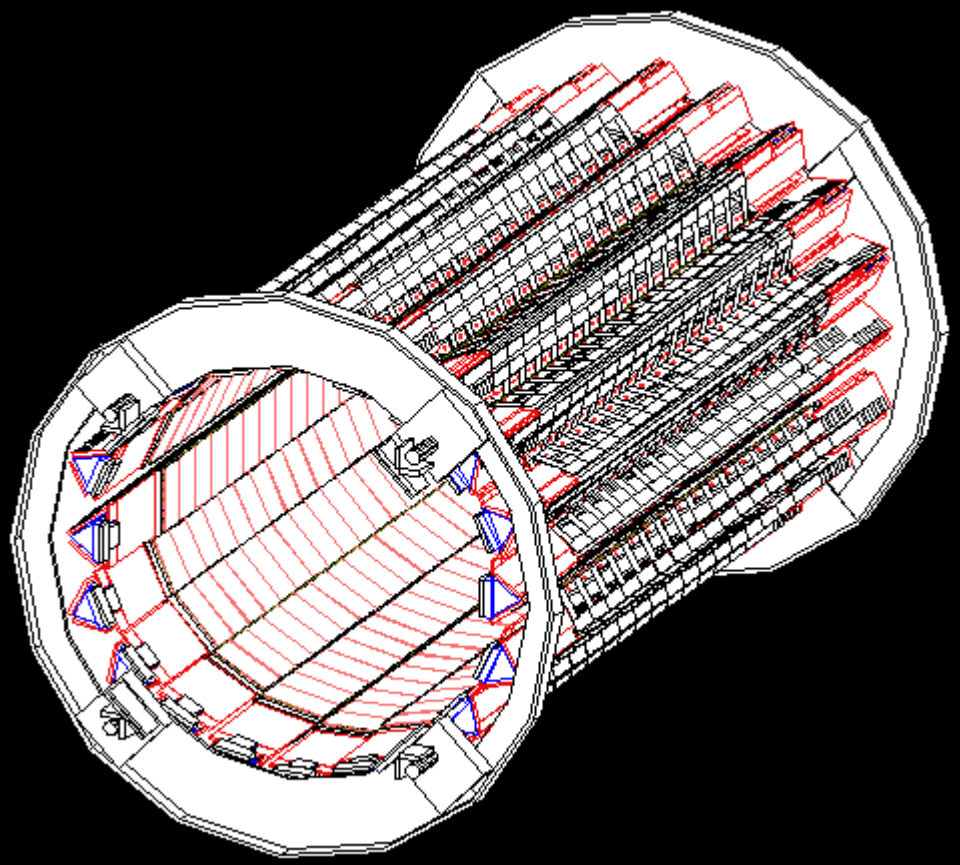

Simulation geometry IST

3 layers at 70, 120 and 170mm
57 ladders
1236 silicon sensors
thermal plates and substrates
readout chips (approximated)
cooling channels

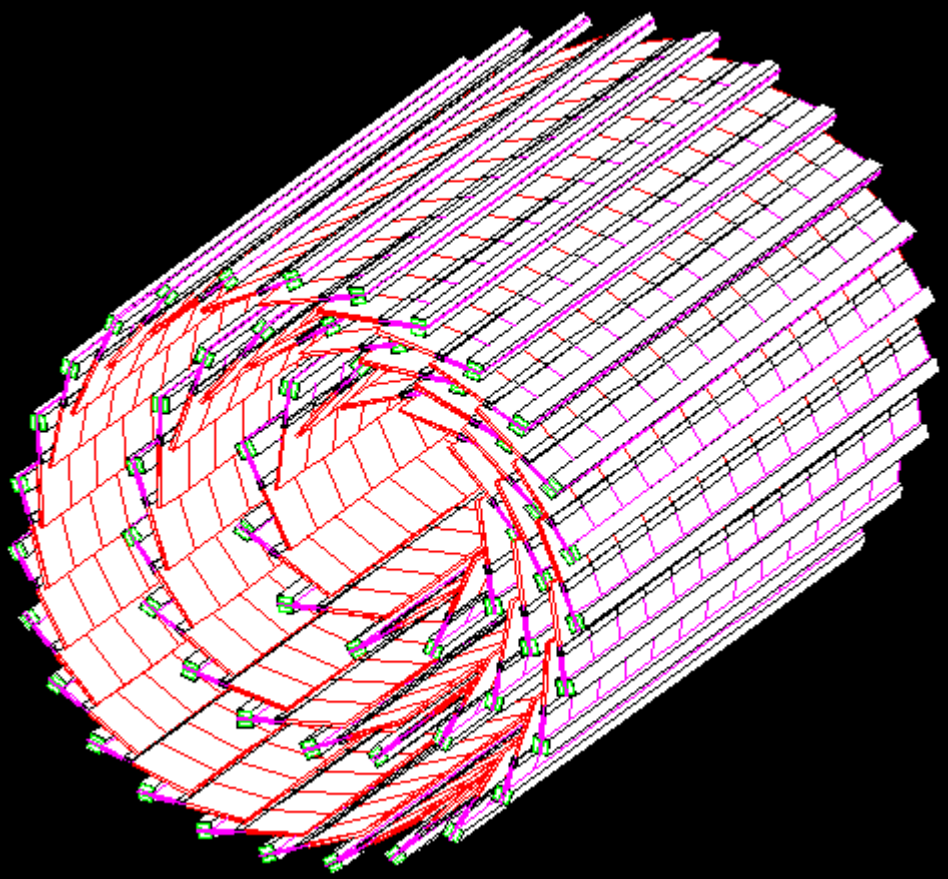

Simulation geometry HFT

Very basic implementation

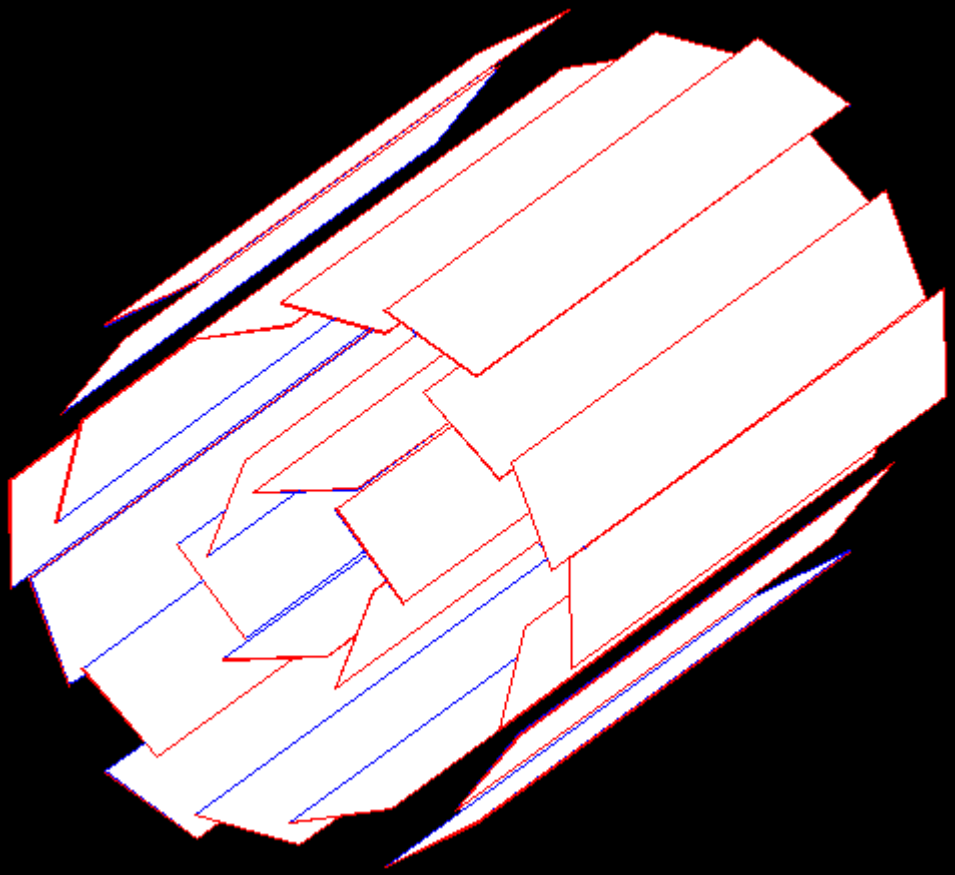

Also the mechanical construction should be modeled

Simulation geometry FST

4 disks at z = 280, 310, 340 and 370mm
21 wedges per disk
336 silicon sensors
thermal plates and substrates
readout chips (approximated)
cooling channels (approximated)

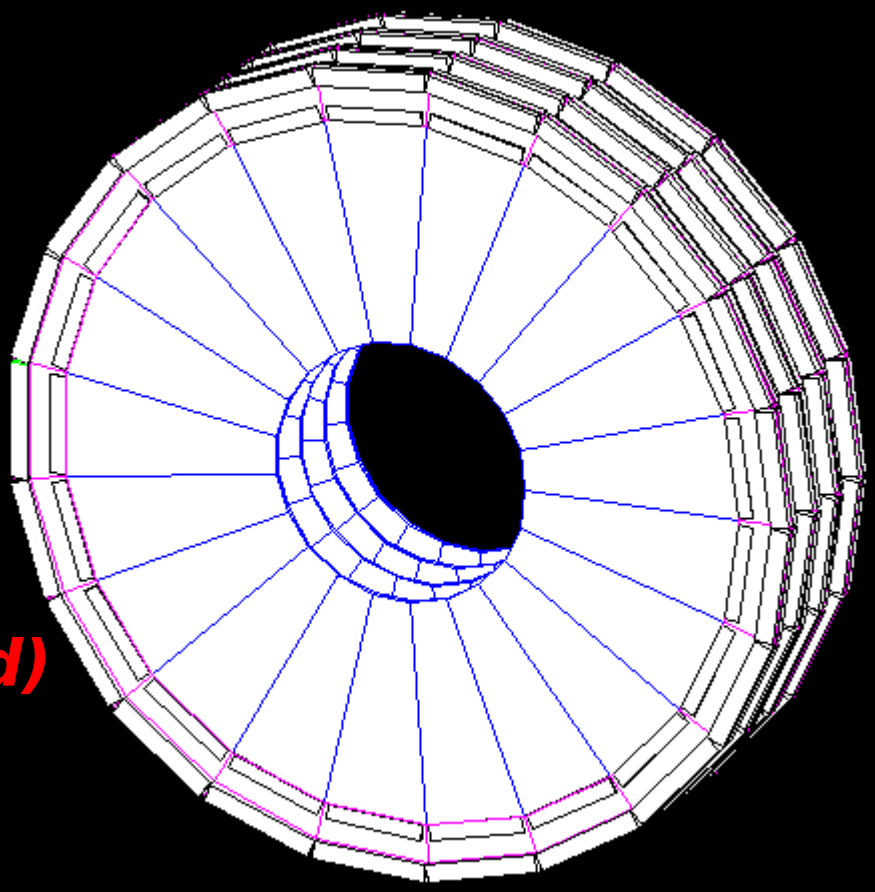

Simulation geometry FGT

Argon/Carbondioxide volumes with G10 and Kapton

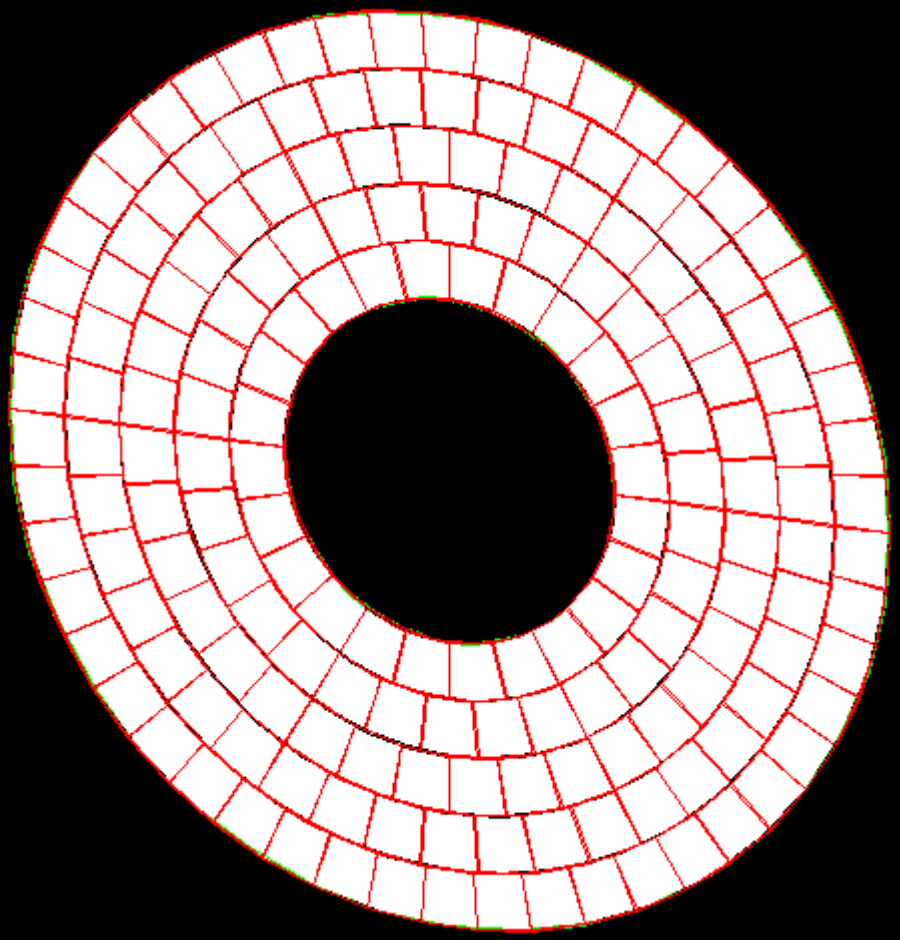

Fast simulations

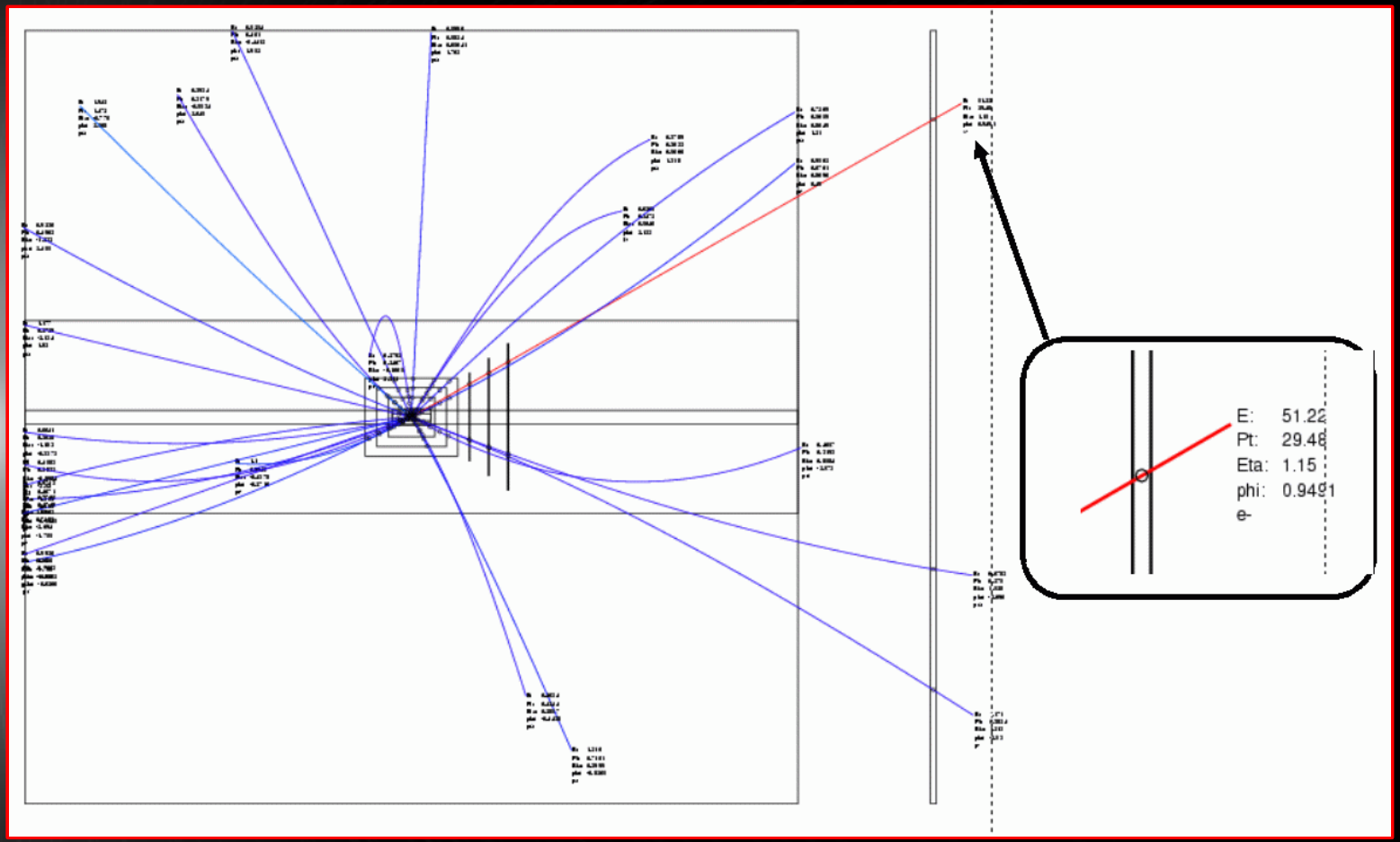

Minimal preliminary geometry
First step to look at e+ e- charge separation
Still working on framework

Full blown simulations

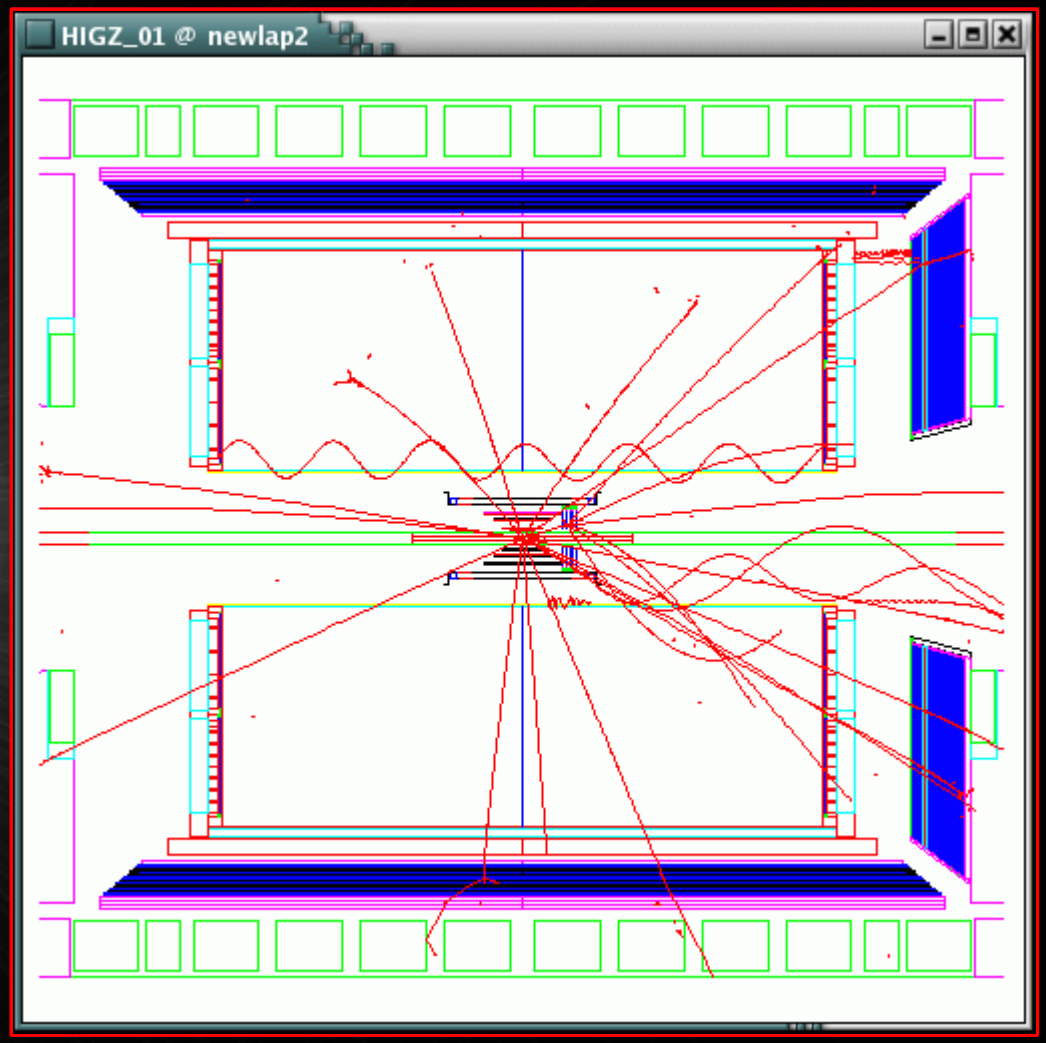

Focus on occupancy for high luminosity Au+Au and charge separation for polarized p+p

Readout R&D

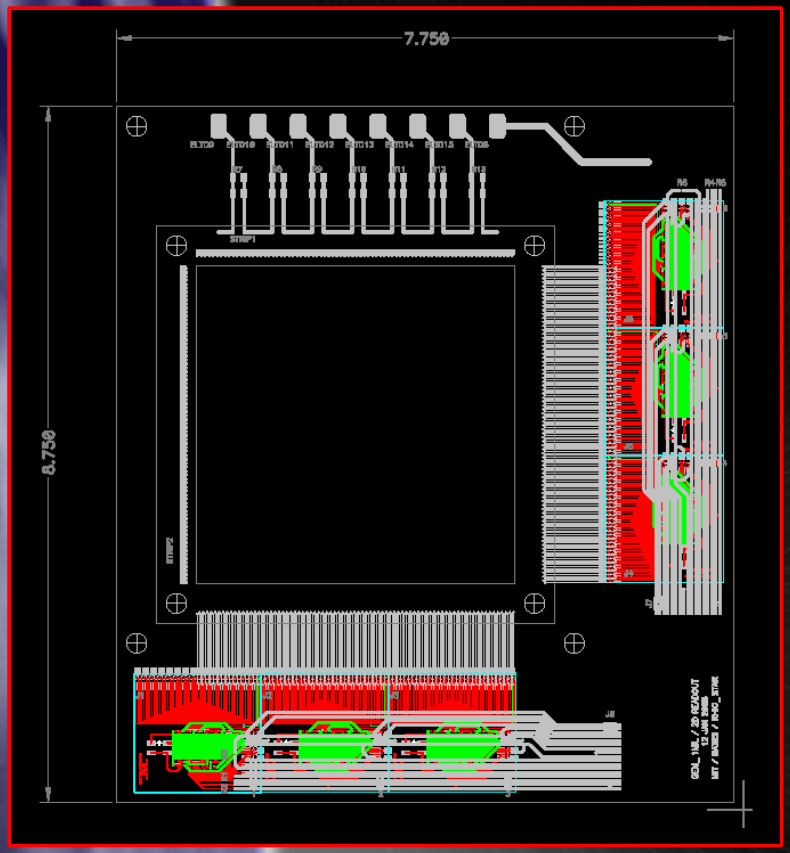

GEM readout board with chip piggy-backs
20 boards ordered

APV25-S1 readout chip

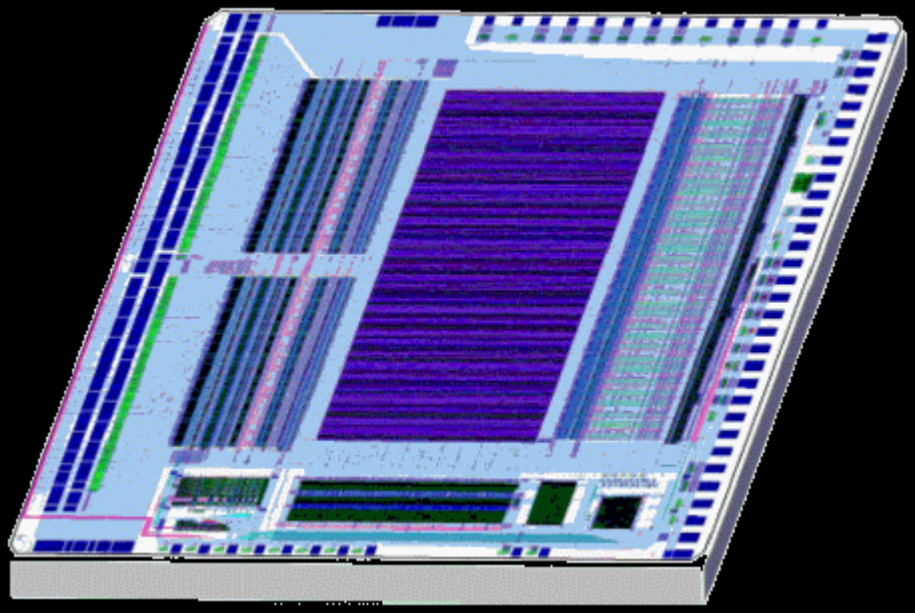

Single chip readout board

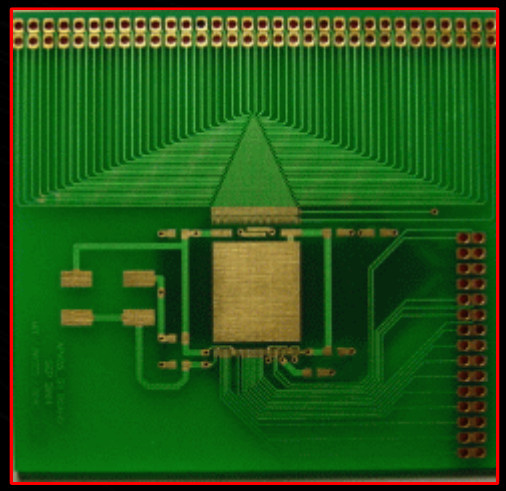

Same readout system for GFT, IST and FST!
DAQ1000 compatible
Profiting from TOF developments

Readout R&D

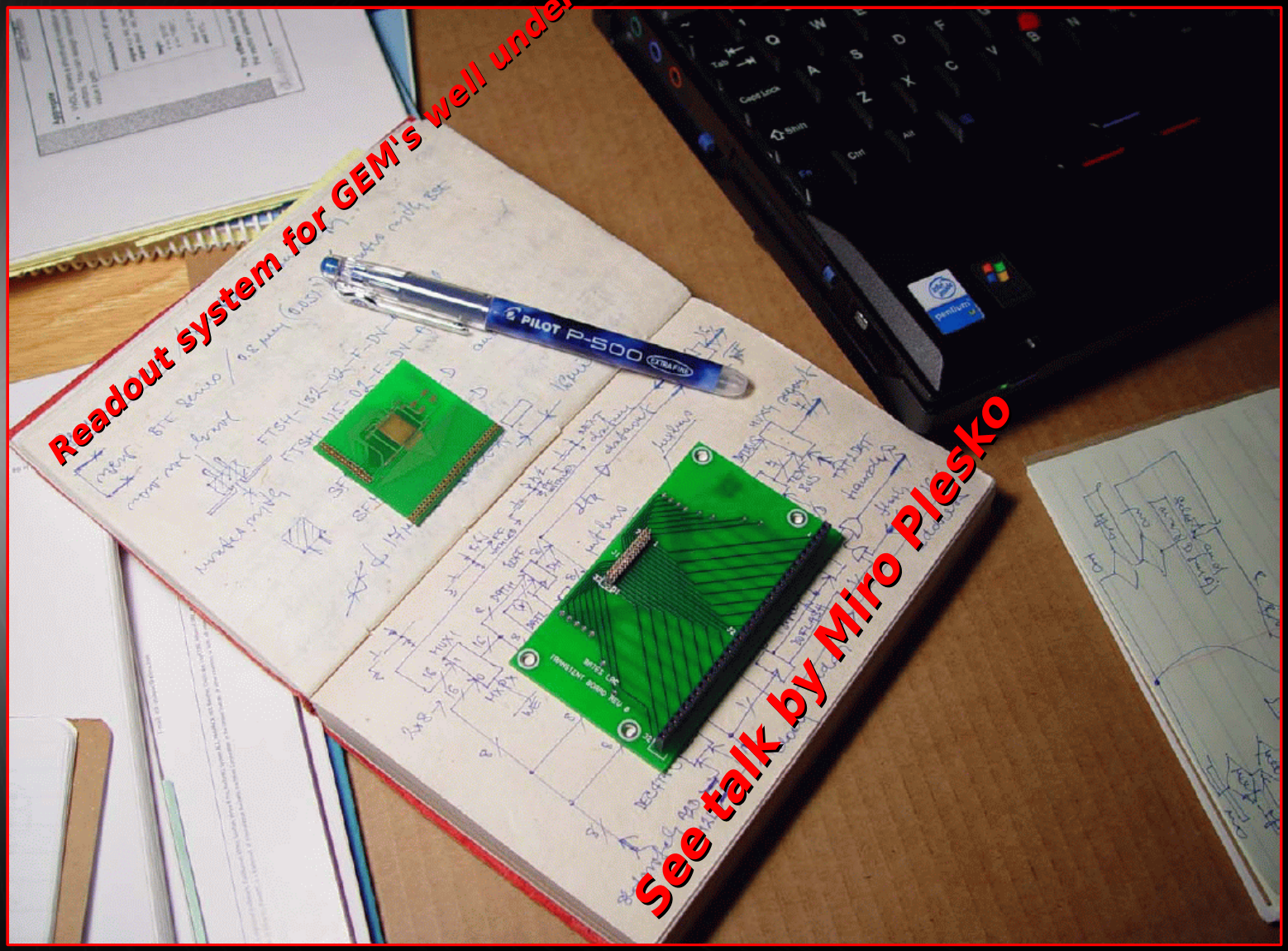
Readout system for GEM's well underway
See talk by Miro Plesko
PILOT P-500

Participating institutions, so far....

ARGONNE NATIONAL LABORATORY

INDIANA UNIVERSITY CYCLOTRON FACILITY

BERKELEY LAB

UNIVERSITAS STUDIORUM ZAGRABIENSIS MDCLXIX

BROOKHAVEN NATIONAL LABORATORY

MASSACHUSETTS INSTITUTE OF TECHNOLOGY 1861 MENS ET MANUS

LNS LABORATORY FOR NUCLEAR SCIENCE

Massachusetts Institute of Technology Bates Linear Accelerator Center

YALE UNIVERSITY

Active human resources

DAQ & chip readout

Miro Plesko
Dave Underwood

Mechanical design

Gerrit van Nieuwenhuizen
Jim Kelsey
Doug Hasel

Silicon procurement

Gerrit van Nieuwenhuizen

GEM R&D

Doug Hasel, Bernd Surrow
Dick Majka, Nicolai Smirnov
Hal Spinka, Dave Underwood
Kerry Kernie (Tech Etch)

GEANT geometries

Maxim Potekhin
Gerrit van Nieuwenhuizen
Dave Underwood (TPC endcap)

Simulations

Mike Miller
Mirko Planinic
Willie Leight

System integration

TBA

Coordination

Bernd Surrow

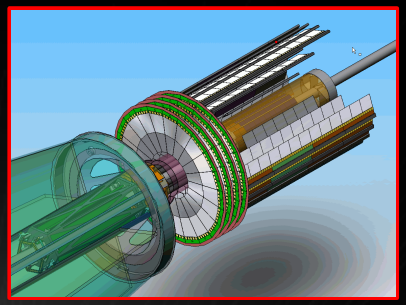

Time lines

Current scenario

Stage 1: Active pixel HFT with a minimal IST based on silicon strip technology

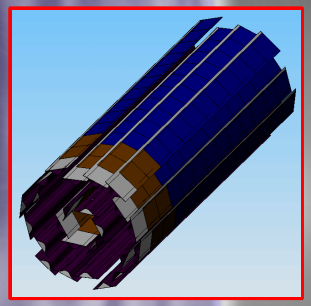

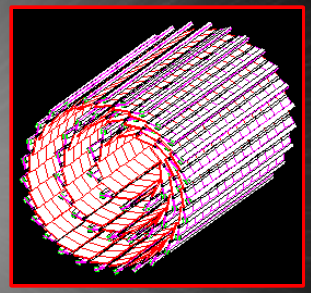

Proposal HFT in beginning of 2005

Proposal IST in summer 2005

Installation in summer 2008

Stage 2: Upgrade forward tracking with IST and FGT

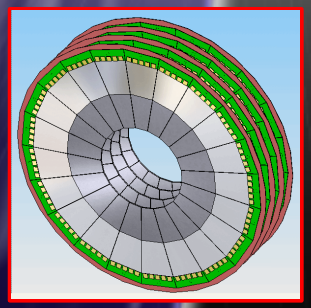

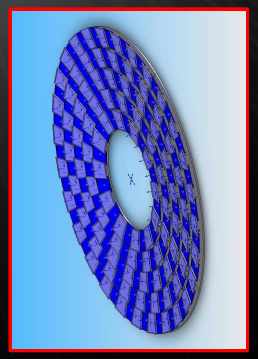

Proposal FST and FGT in summer 2006

Installation in summer 2009