Status of IST and FST simulation geometry

Gerrit van Nieuwenhuizen
TUP meeting
January 7, 2005

Put IST and FST in geometry

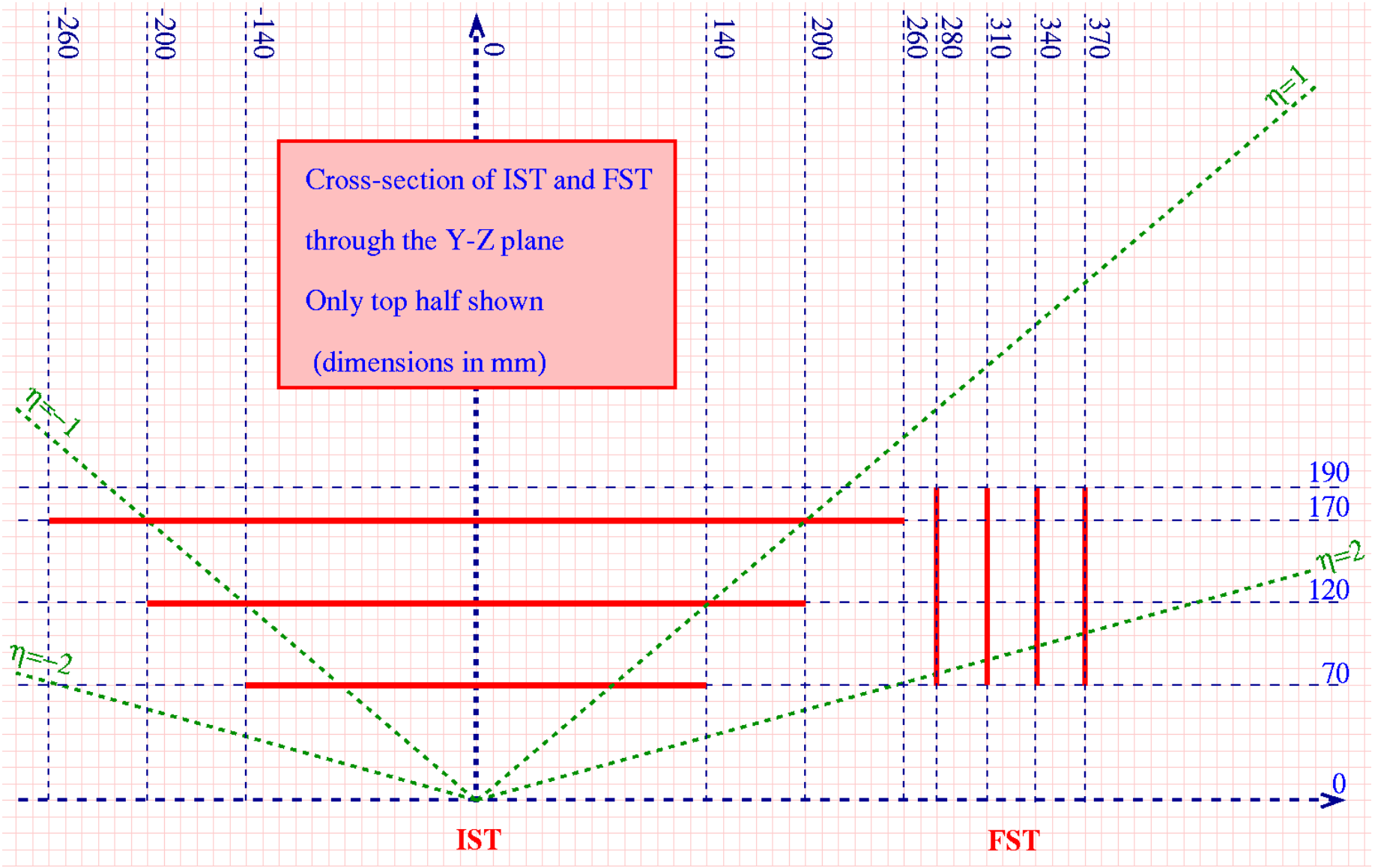

IST geometry in StarSim

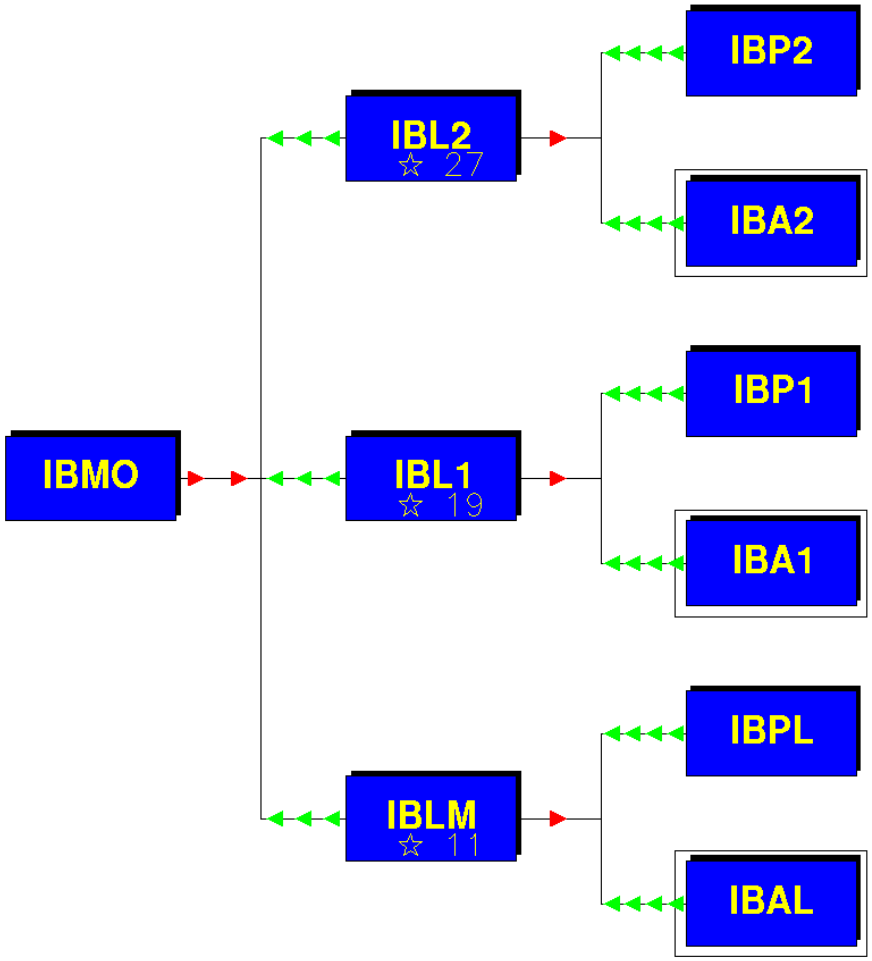

IST specifications

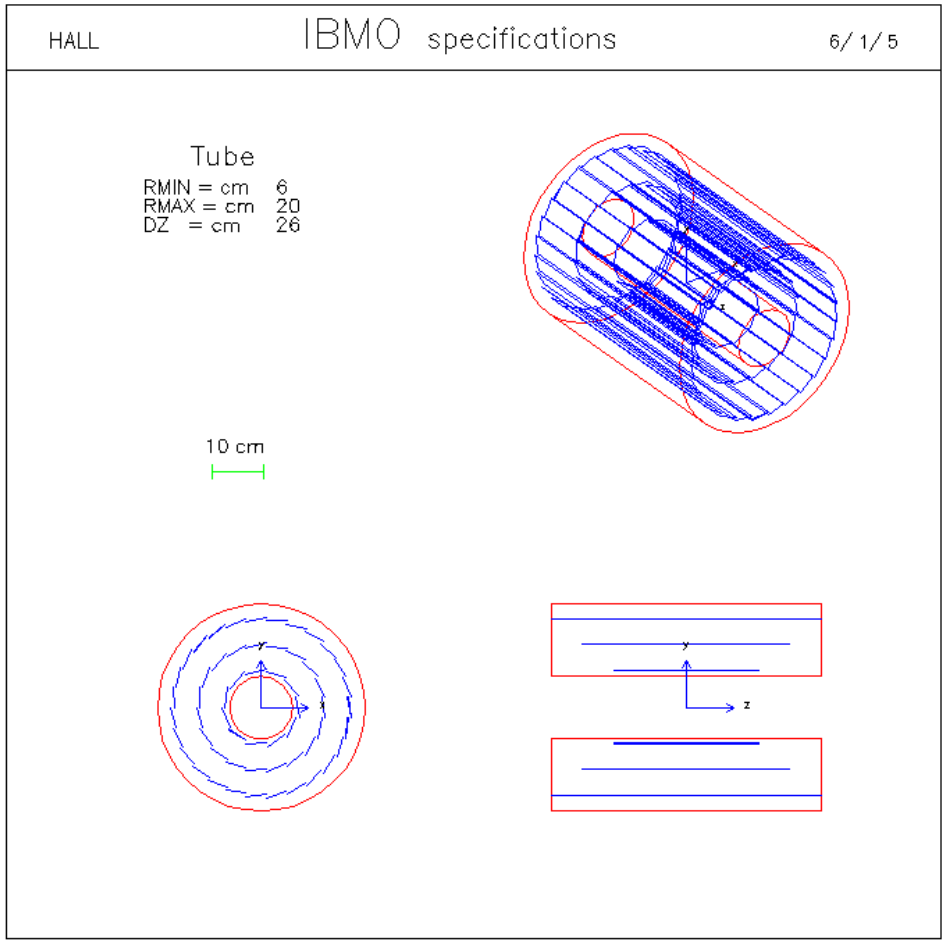

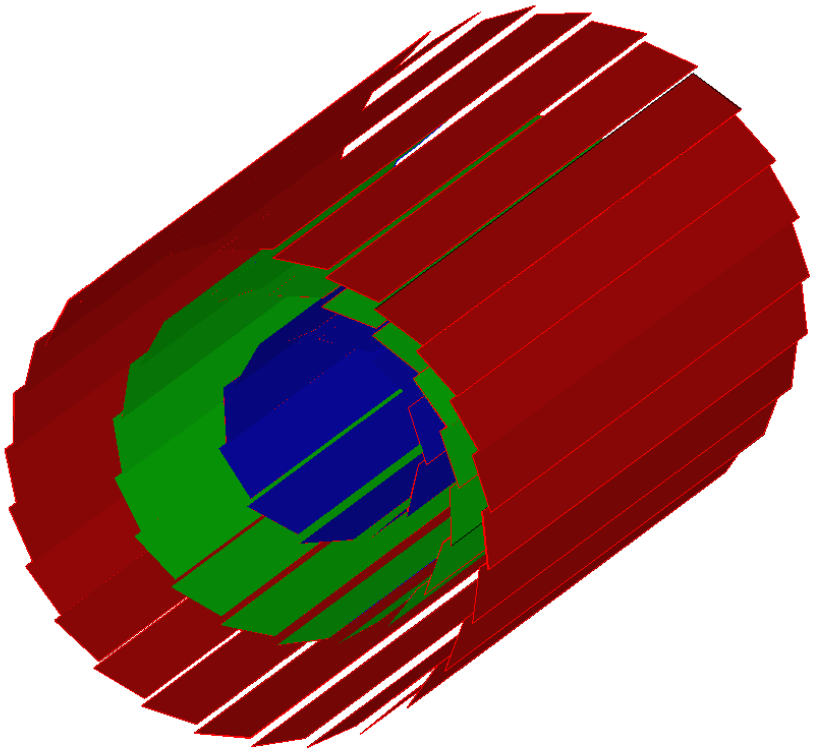

IST ladder specifications

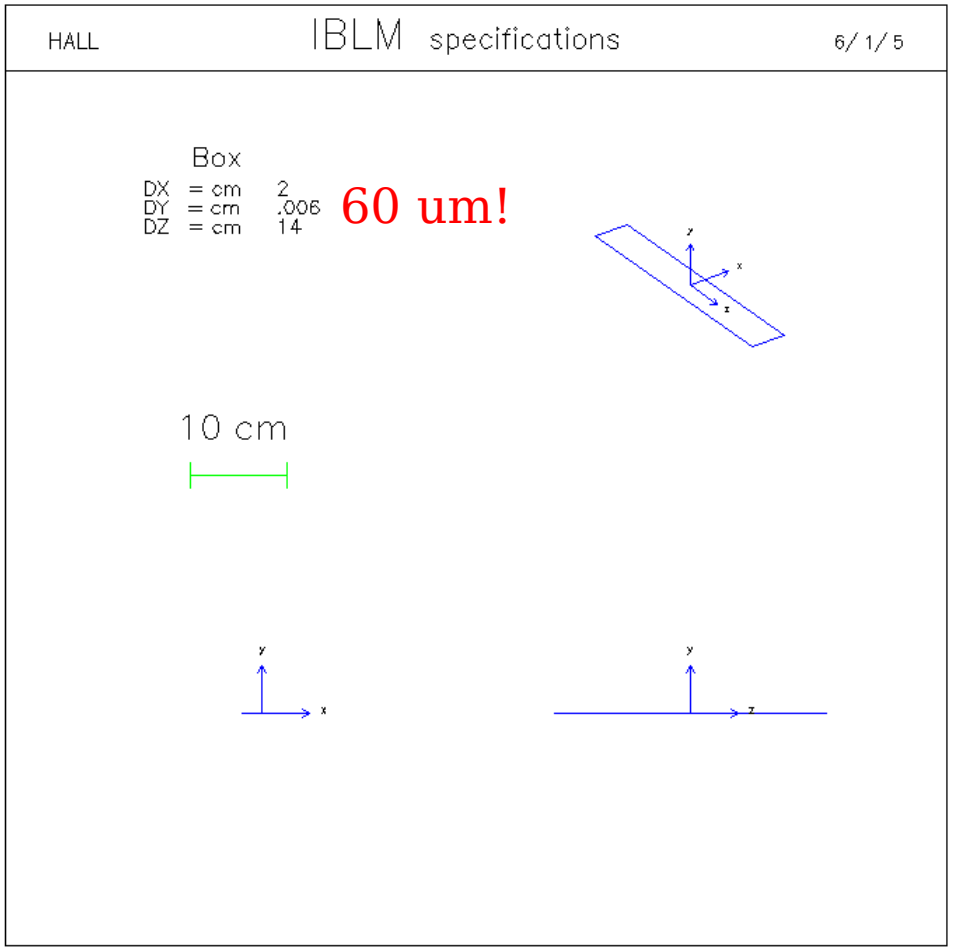

Only Silicon

No hybrids, chips, thermal plate or cooling tube

Size of silicon OK, but not segmented

Thickness wrong!

What we asked for

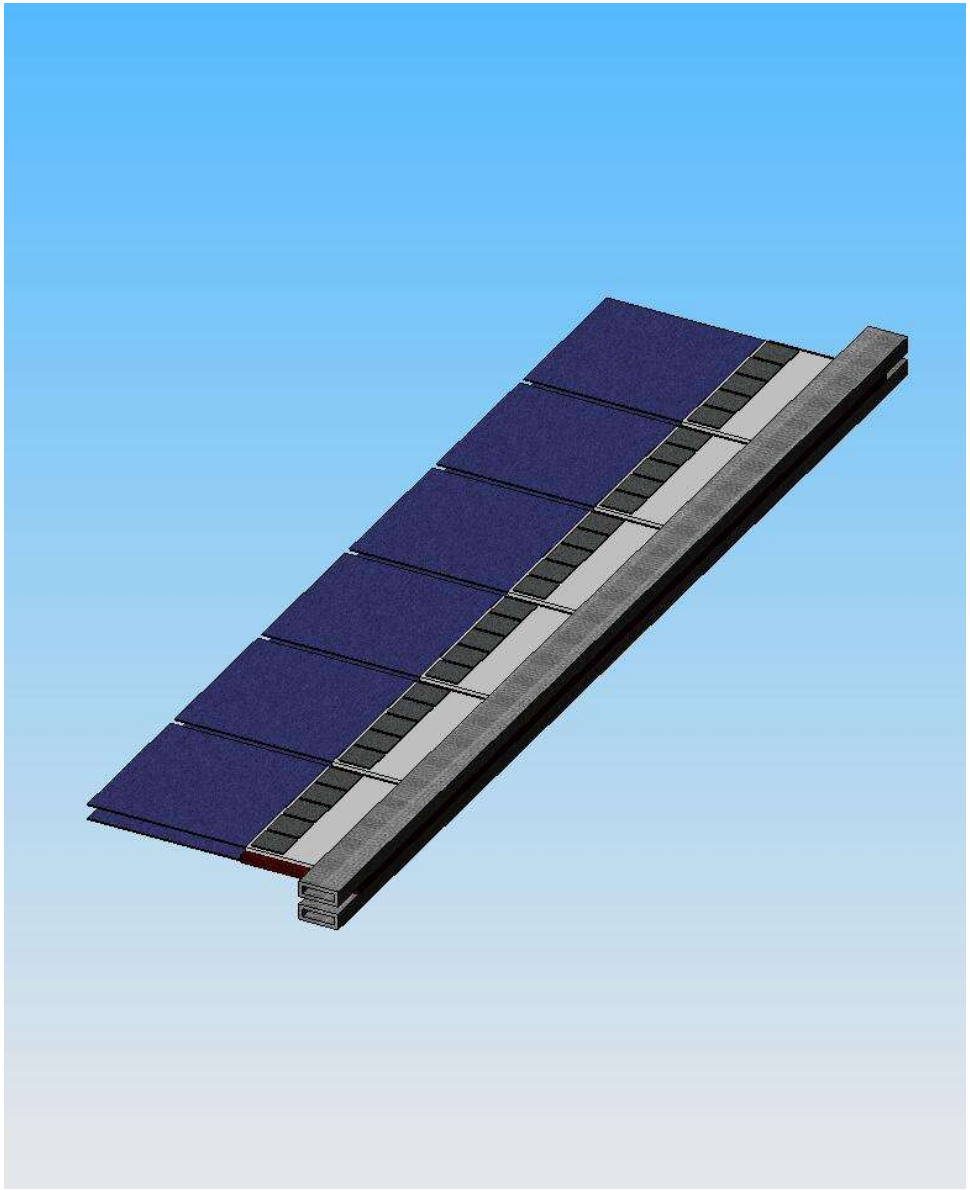

IST sketches for fast simulation purposes only!

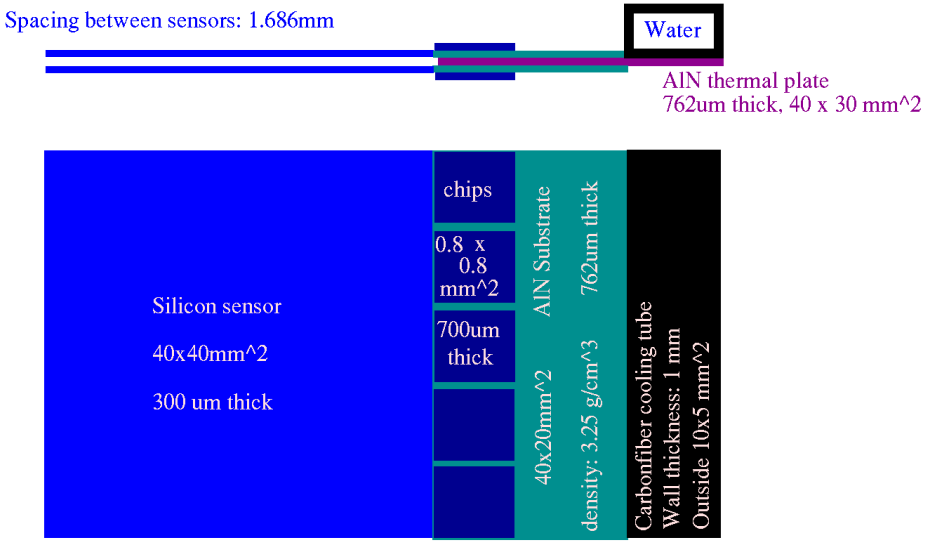

Also the inactive components have to be included!

What's wrong with thickness

```
   Fill ISBG                      ! Pixel detector data
      Layer       =  1            ! layer index
      nLadder     =  11           ! ladder count
      Length      =  28.0         ! Overal length of the detector
*
      LadderWidth=  4.0           ! Ladder Width
      LadderThk   =  0.0120       ! Total ladder Thickness
      PassiveThk  =  0.0100       ! Passive silicon Thickness
      ActiveThk   =  0.0020       ! Active  silicon Thickness
*
      r           =  7.0          ! 1st ladder nominal radius
      a           =  0.0          ! 1st ladder nominal position angle
      aOffset     =  81.0         ! Angular offset
      pOffset     =  0.0          ! Position offset (shift)
   EndFill
*
   Fill ISBG                      ! Pixel detector data
      Layer       =  2            ! layer index
      nLadder     =  19           ! ladder count
      Length      =  40.0         ! Overal length of the detector
*
      LadderWidth=  4.0           ! Ladder Width
      LadderThk   =  0.0120       ! Total ladder Thickness
      PassiveThk  =  0.0100       ! Passive silicon Thickness
      ActiveThk   =  0.0020       ! Active  silicon Thickness
*
      r           =  12.0         ! 2nd ladder nominal radius
      a           =  0.0          ! 2nd ladder nominal position angle
      aOffset     =  81.0         ! Angular offset
      pOffset     =  0.0          ! Position offset (shift)
   EndFill
*
   Fill ISBG                      ! Pixel detector data
      Layer       =  3            ! layer index
      nLadder     =  27           ! ladder count
      Length      =  52.0         ! Overal length of the detector
*
      LadderWidth=  4.0           ! Ladder Width
      LadderThk   =  0.0120       ! Total ladder Thickness
      PassiveThk  =  0.0100       ! Passive silicon Thickness
      ActiveThk   =  0.0020       ! Active  silicon Thickness
*
      r           =  17.0         ! 2nd ladder nominal radius
      a           =  0.0          ! 2nd ladder nominal position angle
      aOffset     =  81.0         ! Angular offset
      pOffset     =  0.0          ! Position offset (shift)
   EndFill
```

Checked the geometry code

The keyword is 'Pixel'

Looks like Maxim has taken the pixel detector specs

An active AND a passive Silicon structure is made

Requested FST geometry

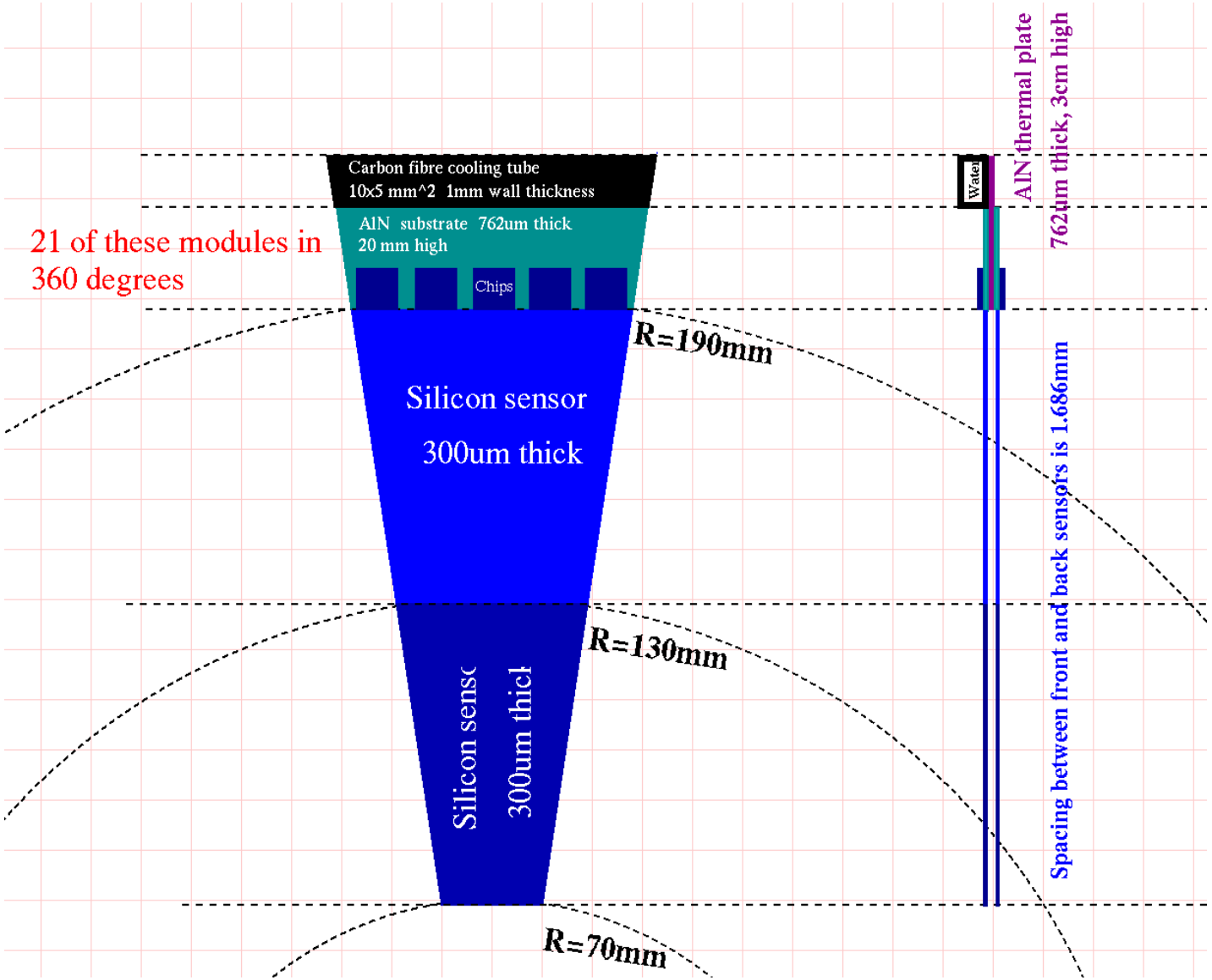

Initial FST geometry

Nothing more than 8 disks of bare silicon

No segmentation

No hybrids, no chips, no thermal plate, no cooling tube

Talked to Maxim last Monday and he promised to make improvements

Current FST geometry

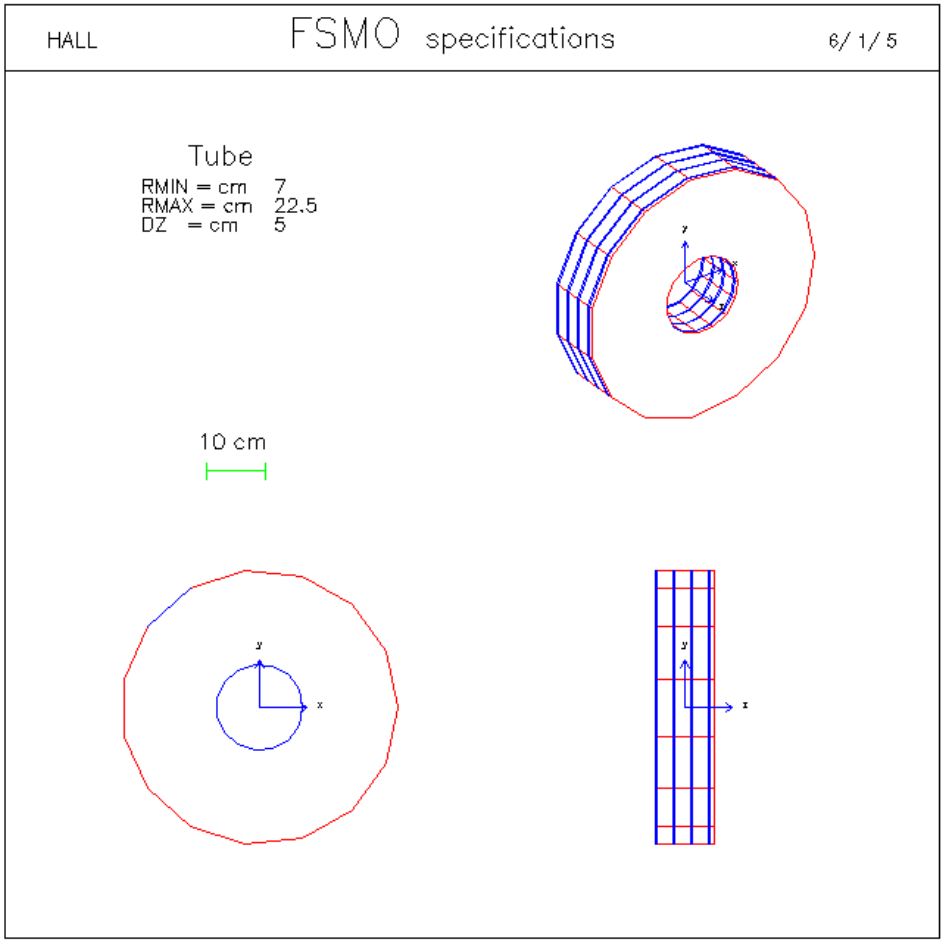

FST segmentation and wedges

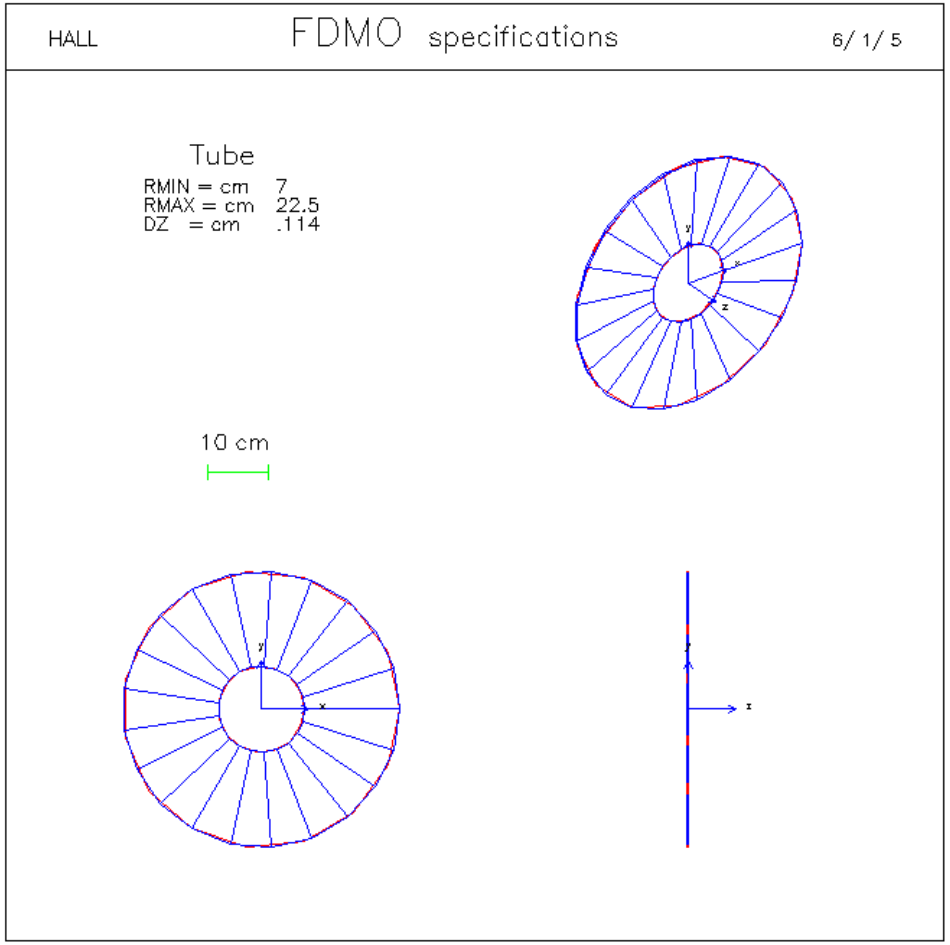

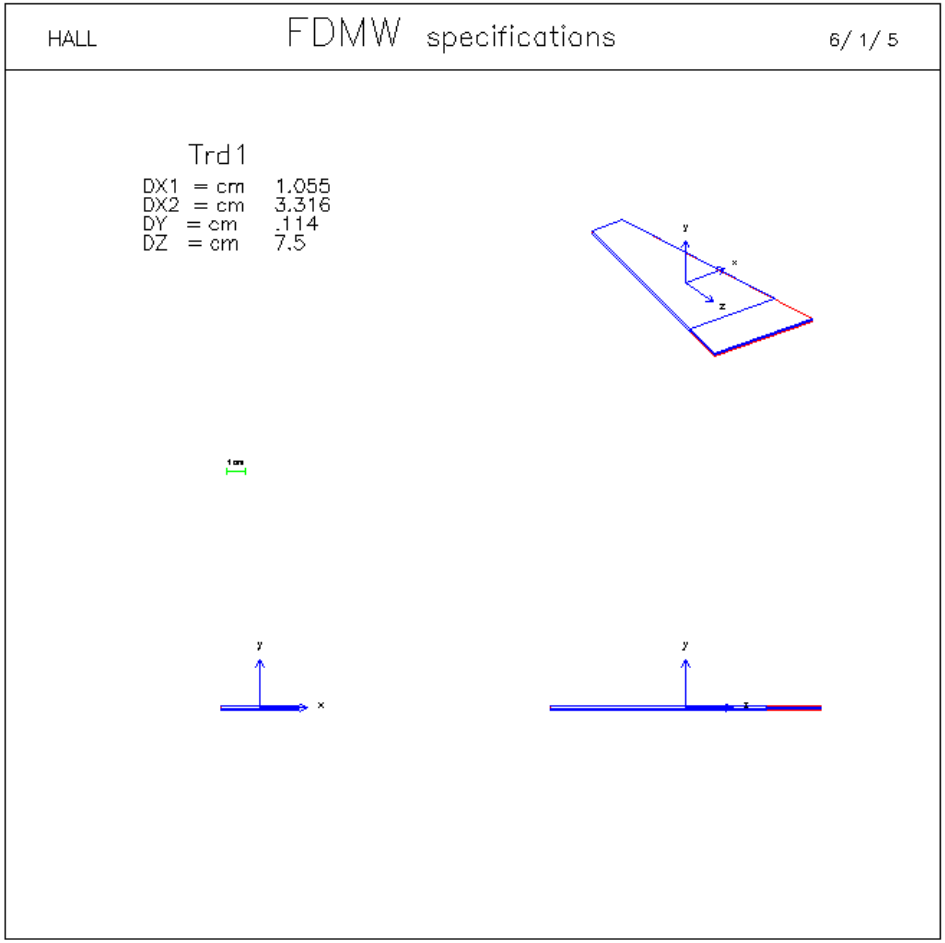

21 wedges with the right dimensions
Still have to check the internal structure and dimensions

Summary

After discussions with Maxim the FST geometry is now coming along

The same has to be done for the IST geometry, i.e. adding internal structure and passive material

Maxim has the misconception that this is a pixel detector with a relativily thick passive silicon layer and a thin epitaxial layer
This propagates into the internal geometry structure

We'll keep in close contact with Maxim and a workable geometry (with hit digitization) should be available before the end of this month