IST-FST-(HFT) Integrated Design

Gerrit van Nieuwenhuizen
STAR TUP Workshop
LBNL, Nov. 6, 2004

IST and FST

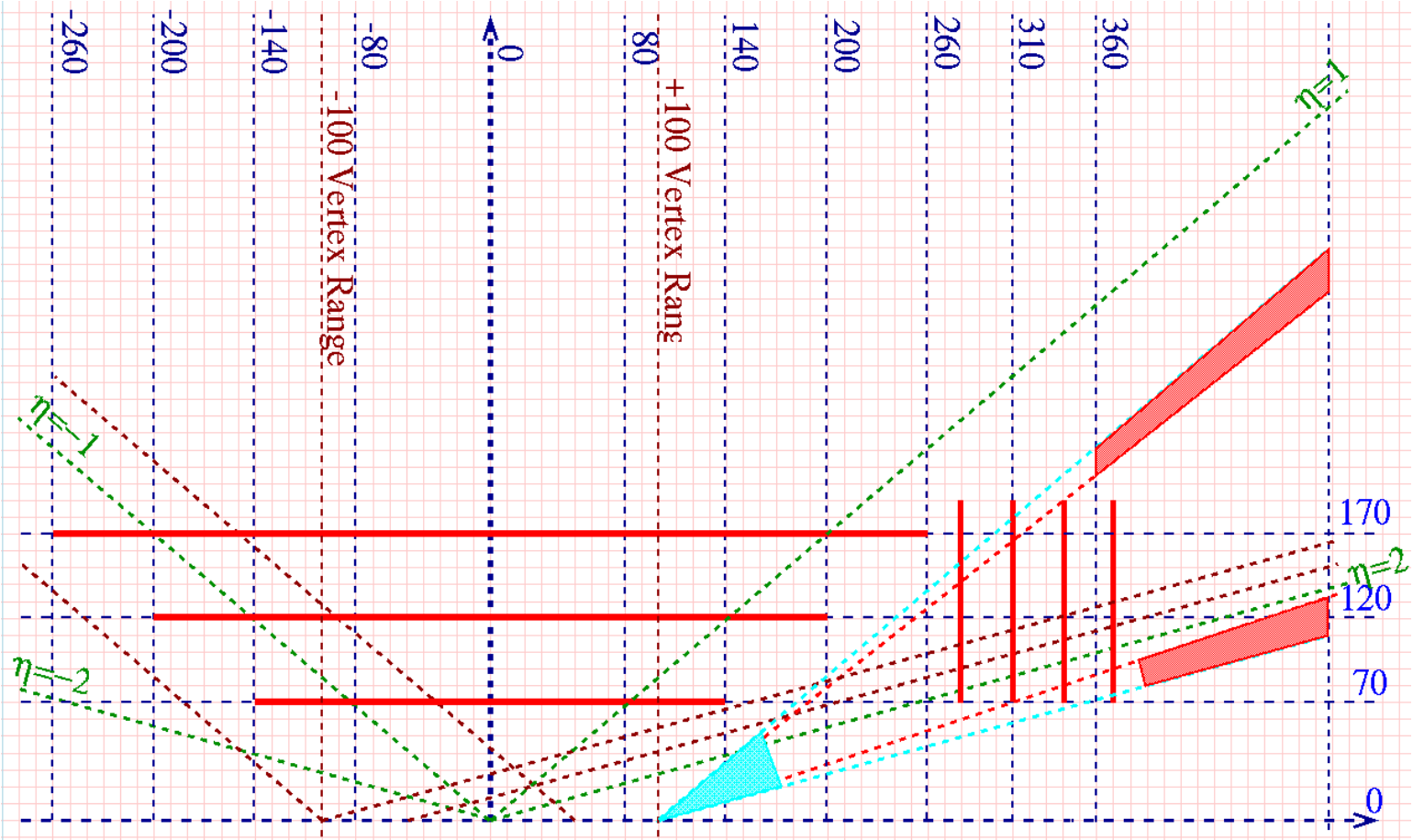

No. sensors in barrel:	1236		
No. 40x40mm^2 sensors:	14 :	20 :	26
Sensors/module:	4/3 :	4/3/3 :	4/3/3/3
No. of ladders:	11 :	19 :	27

ADD 2 MORE DISKS or
LIVE WITH 2 HITS INSTEAD
OF 3 HITS IN SMALL REGIONS
6% of 3-hit acceptance lost at +10cm

Scale 1:3

Input for fast simulations

IST simulation layout - Mozilla

File Edit View Go Bookmarks Tools Window Help

Back Forward Reload Stop http://www4.rcf.bnl.gov/~nieuwhzn/STAR_TRACKER/SIMULATIONS/ Search Print

Home Bookmarks Red Hat, Inc. Red Hat Network Support MMM - Cern Mail Servi... Tracking Upgrade WG BNL Intranet Home Page Index of /~nieuwhzn The New York Times >... Google The ROOT System Ho... Latex

Input for fast simulations with the Inner STAR Tracker and Forward STAR Tracker

(valid per October 29, 2004)

Overal layout of IST and FST

In order to make a quick start with the fast simulation for the new STAR trackers I tried to come up with some simplified designs for both the IST (barrel) and FST (disks) without sacrificing the crucial components which will add to the material budget. Ofcourse the whole mechanical support structure (nuts and bolts) is still missing from this document. However, chips, hybrids, carrier and cooling material are included.

The following picture shows a side view with locations and dimensions for both IST and FST

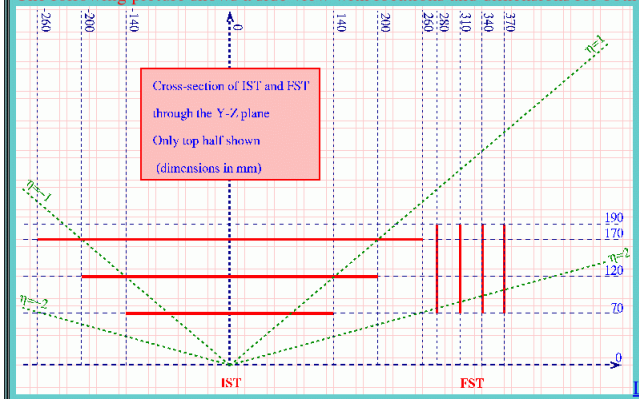

Large version of this picture

Please keep in mind that the above layout is a compromise between size of the tracker and rapidity coverage with a wide vertex distribution. A vertex within -5 to +5cm should be no problem, i.e. 3 or more silicon hits to do tracking with. At a vertex of +10cm we lose about 6% of 3-hit acceptance at the edges of the rapidity bite of +1 to +2 that we are trying to cover.
Each 'layer' in the above picture (the red lines) consists of stereo pair silicon sensors. The overlap which will probably exists between sensors in the actual design is ignored and all sensors are asssumed to have their edges flush with their neighbours.

Done

Simple barrel module

IST sketches for fast simulation purposes only!

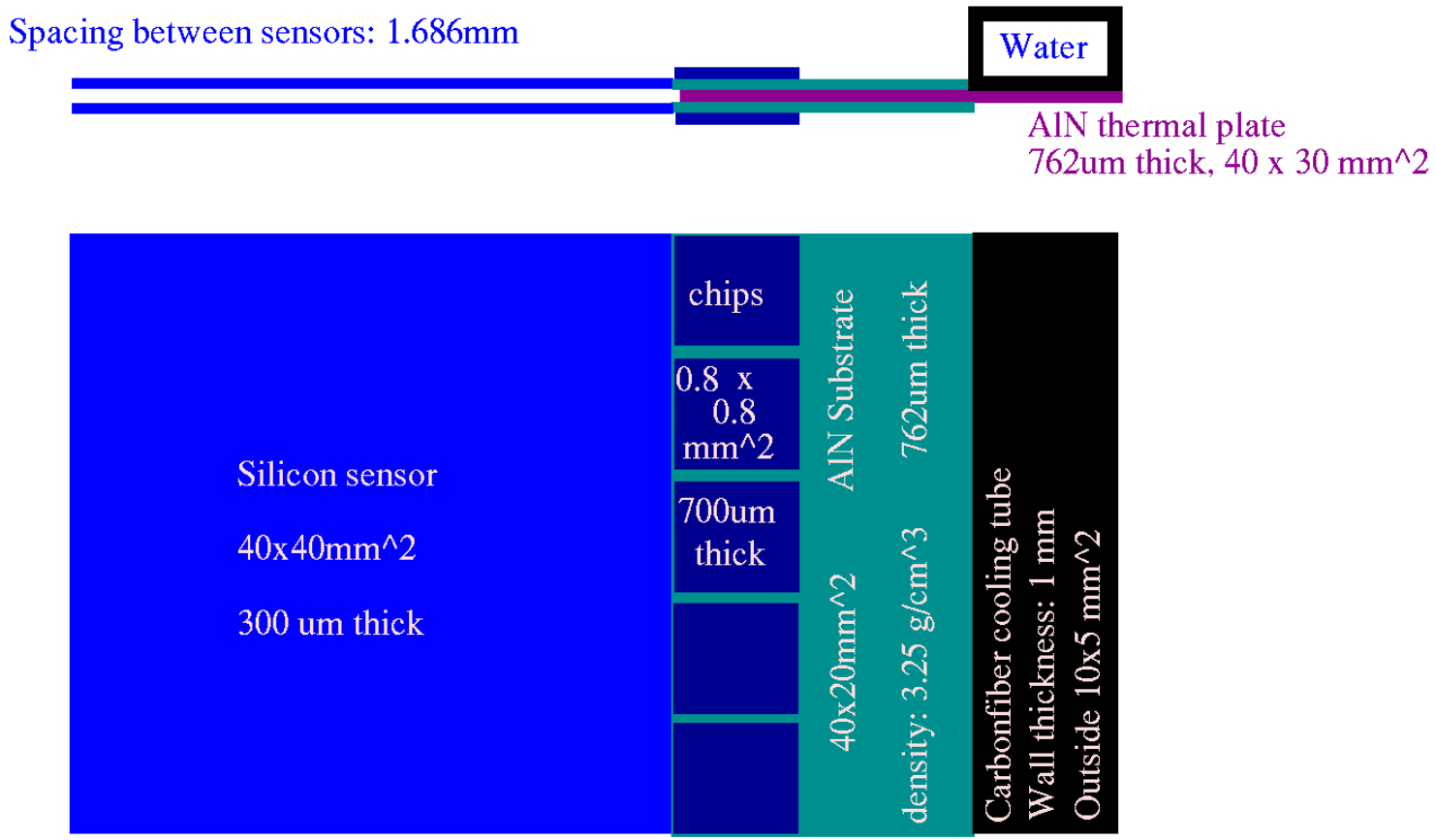

Simple Disk module

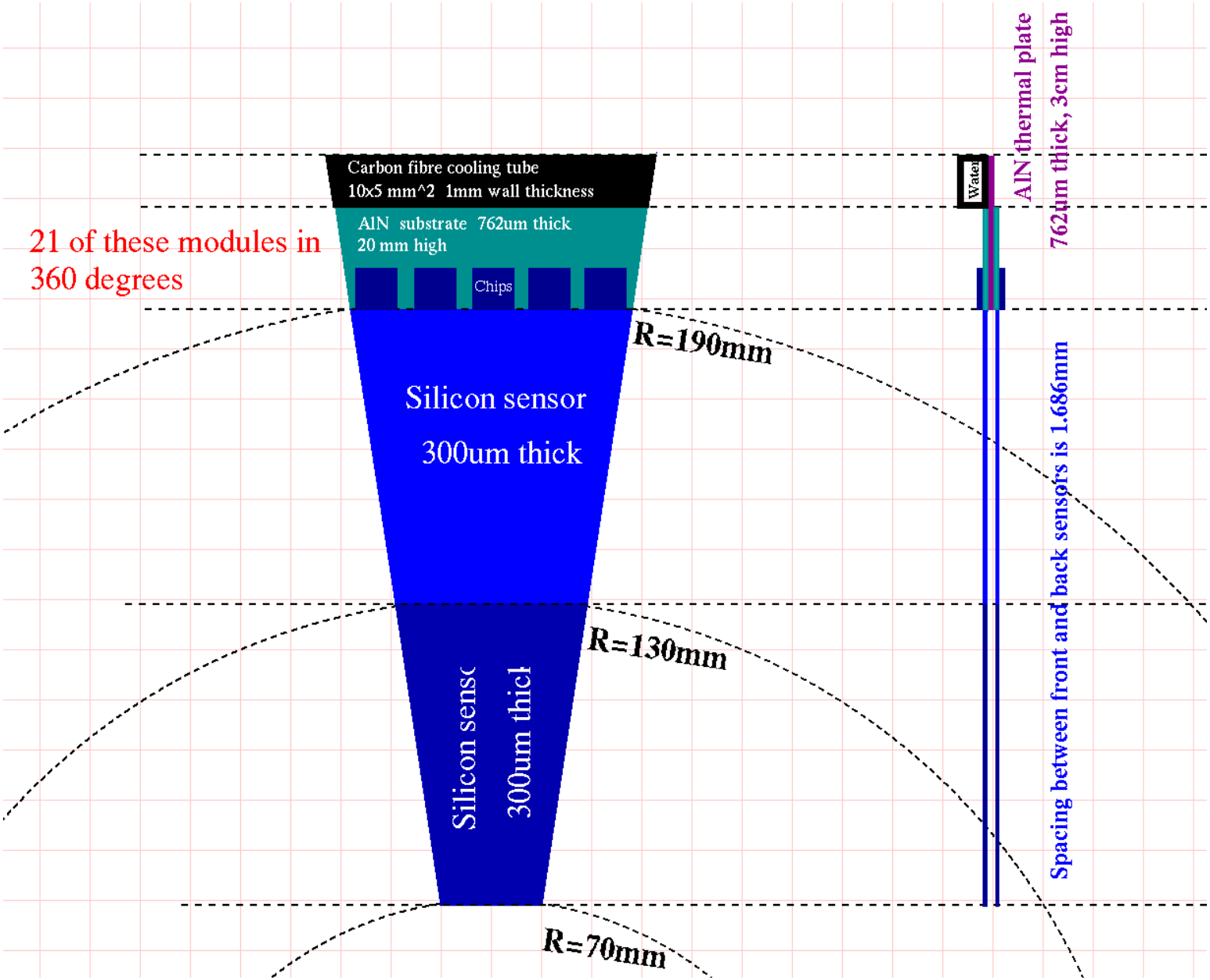

Barrel Layer 1

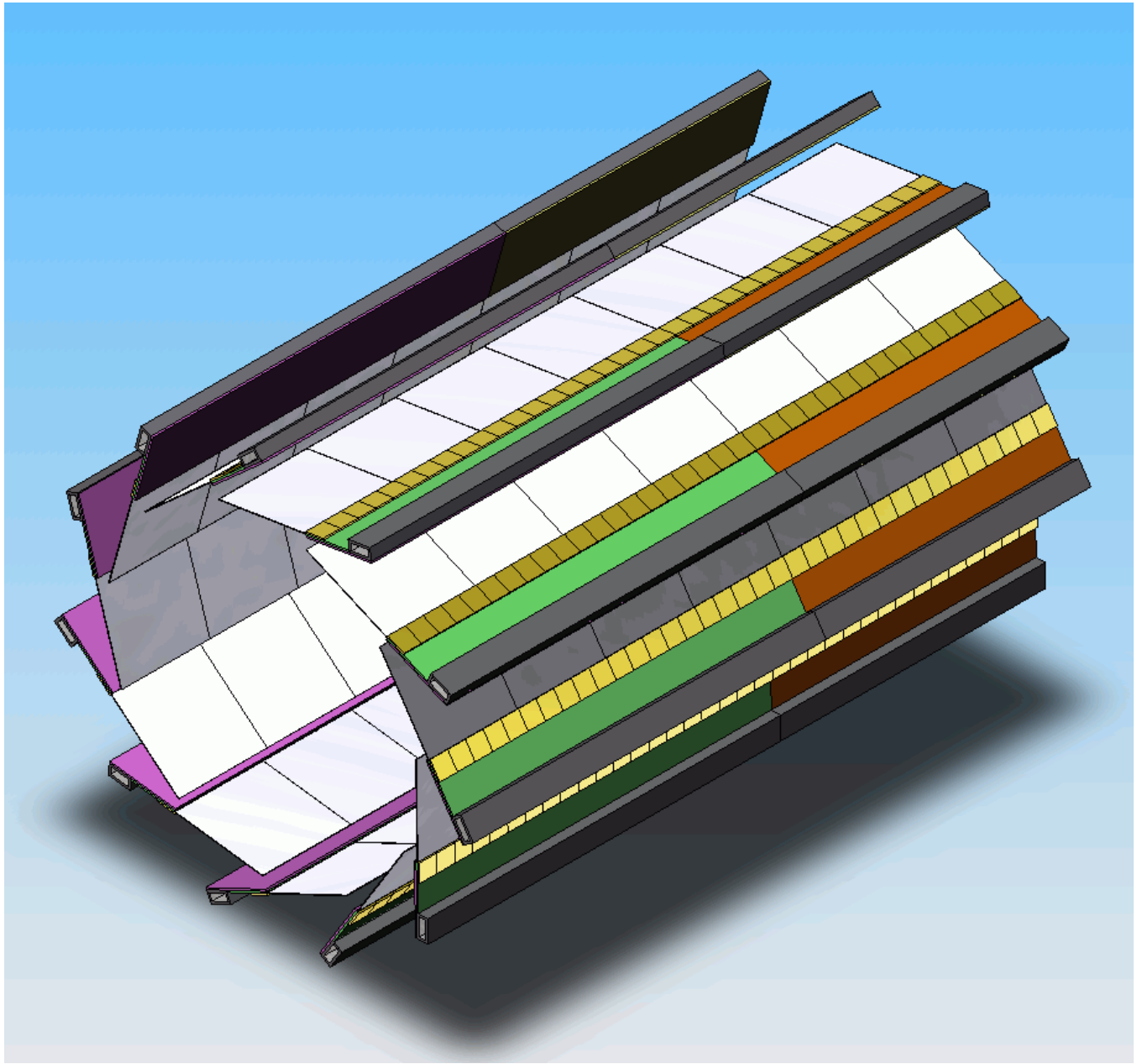

Barrel Layer 2

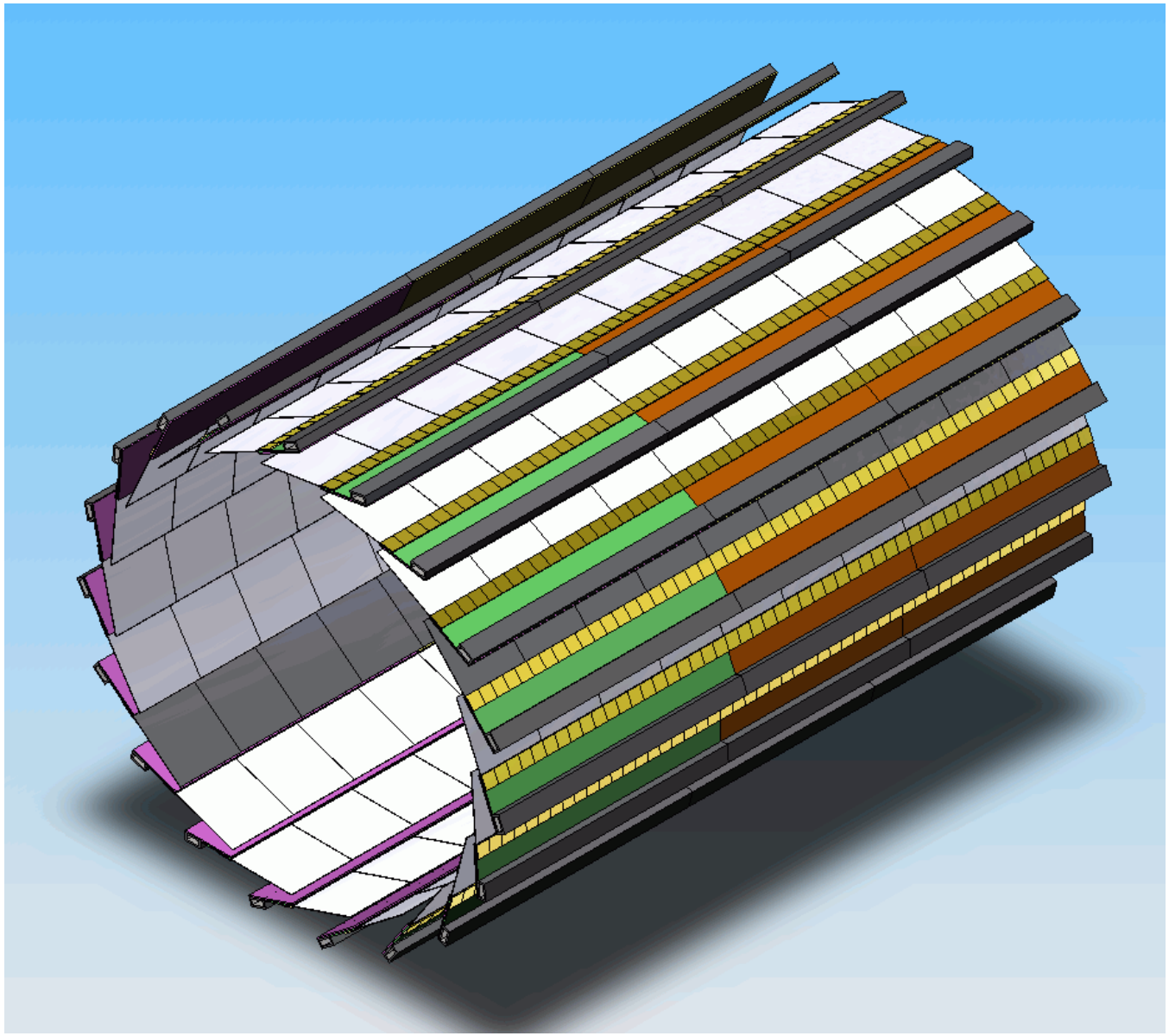

Barrel Modules

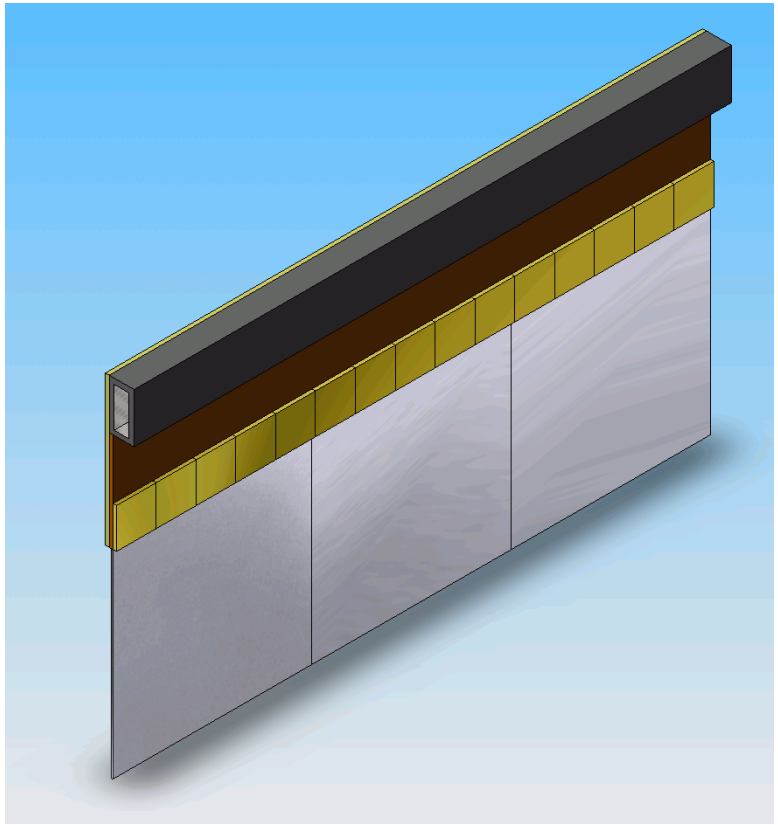

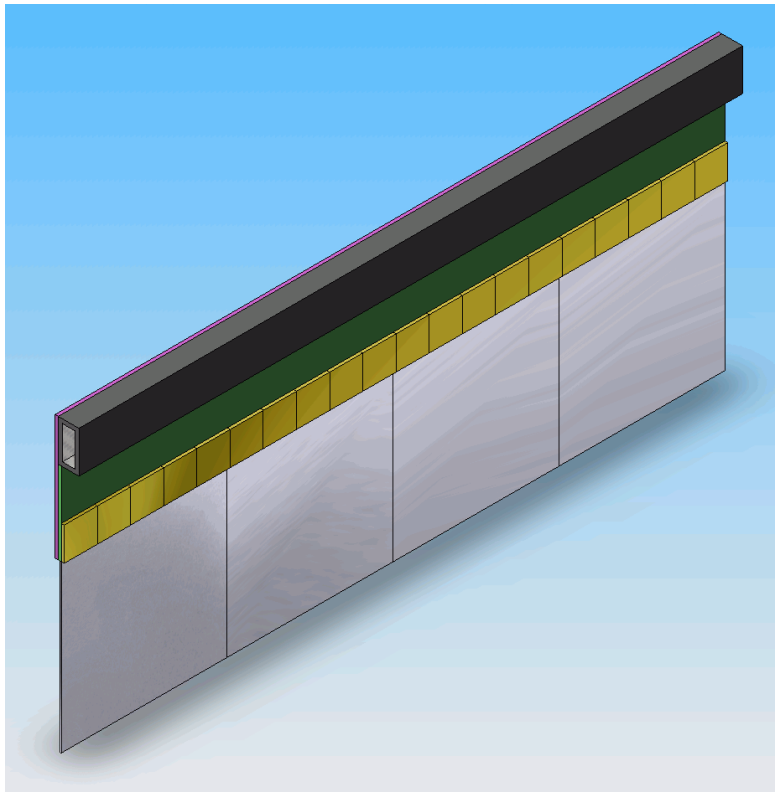
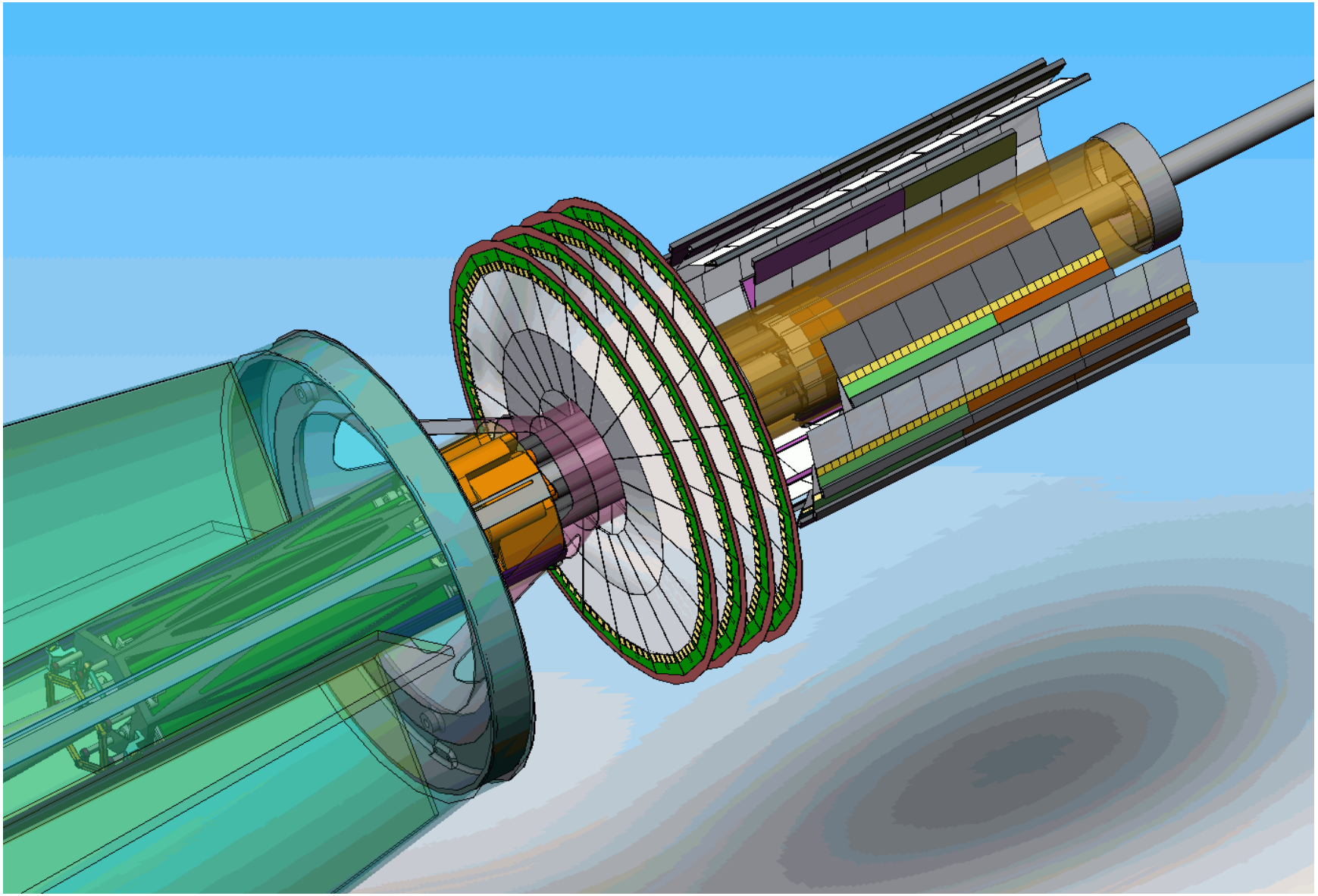
Fitting things together