The STAR Heavy Flavor Tracker upgrade

Physics seminar
BNL, April 16, 2010

Gerrit van Nieuwenhuizen

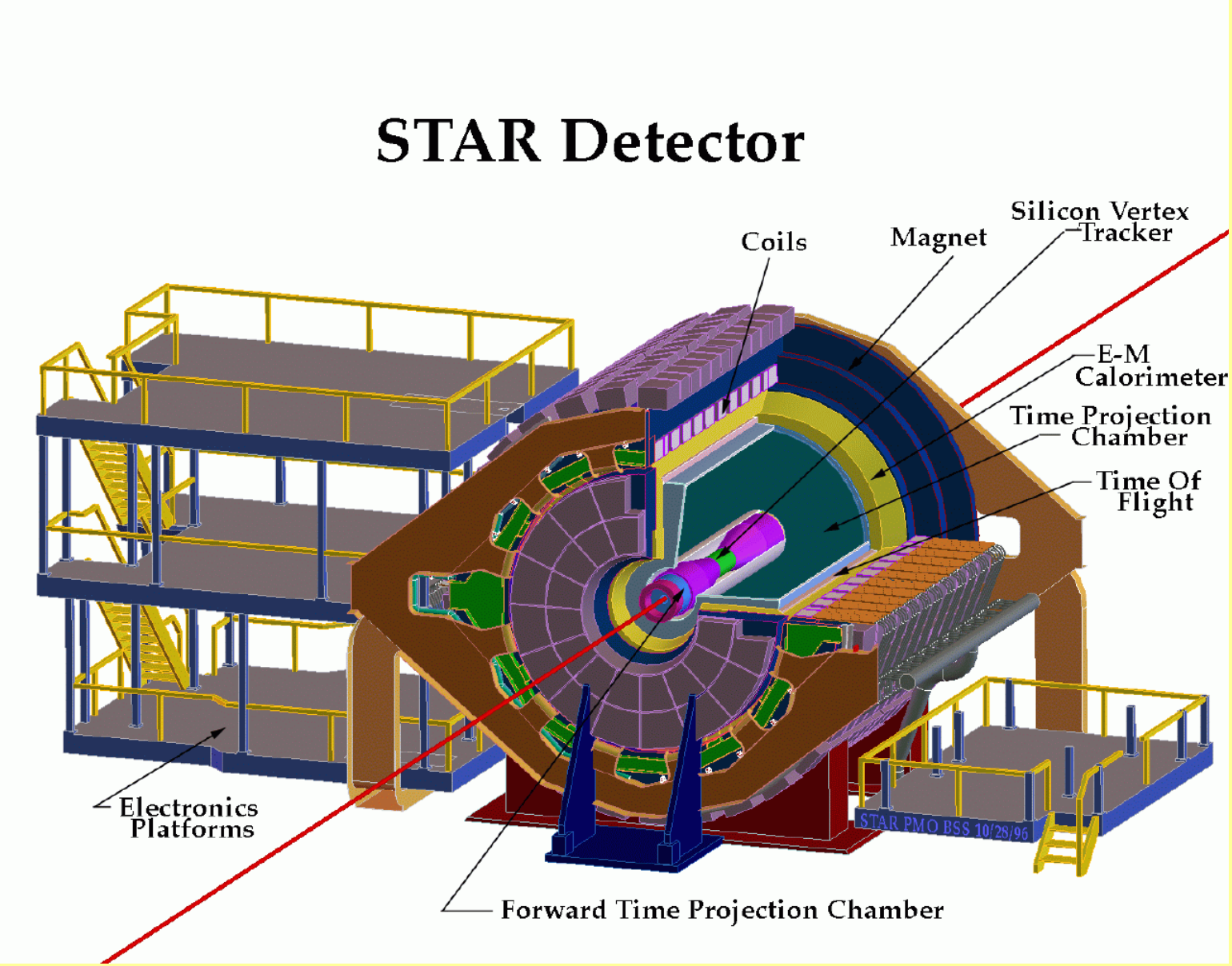
STAR Detector
Silicon Vertex Tracker
Coils
Magnet
E-M Calorimeter
Time Projection Chamber
Time Of Flight
Electronics Platforms
STAR PMO BSS 10/28/96
Forward Time Projection Chamber

Heavy Flavor Tracker Upgrade

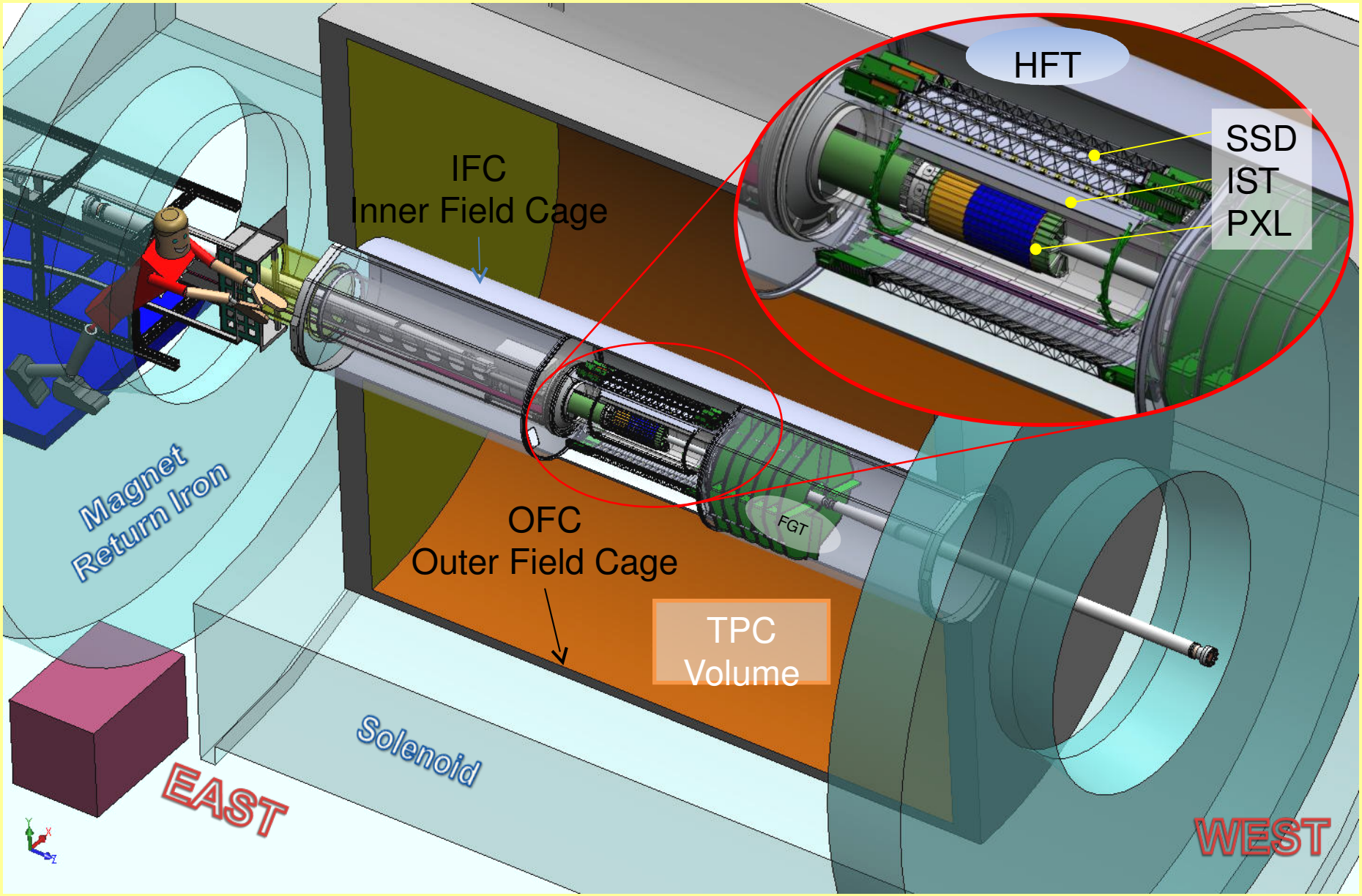

RHIC/Physics

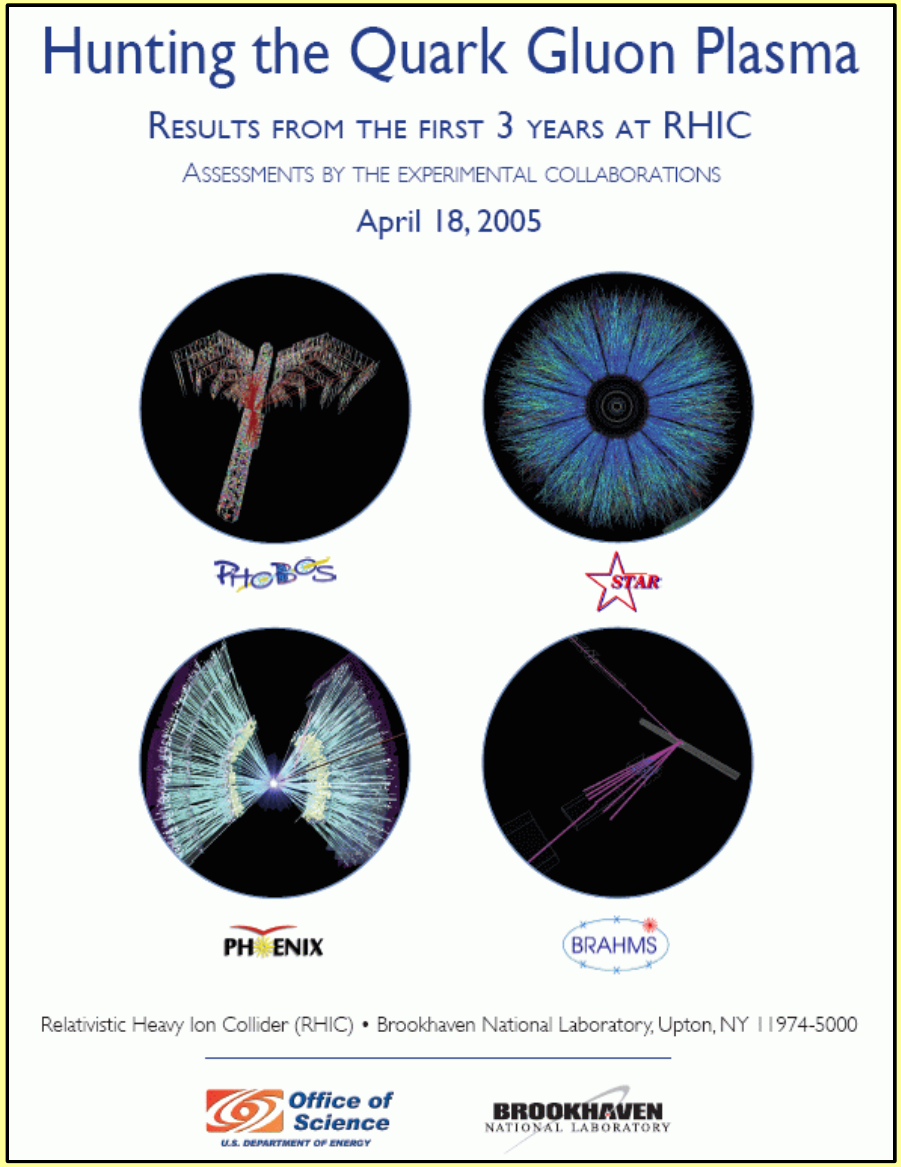

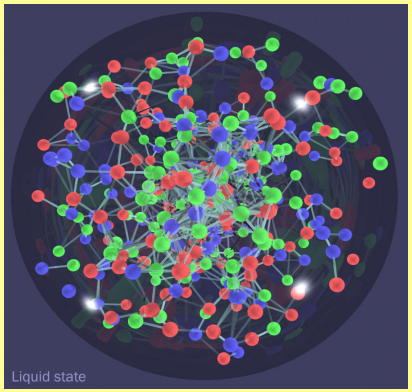

T ~ 200-400 MeV

ε ~ 30-60 ε_{nucl}

Perfect liquid

Flows as a relativistic quantum liquid with viscosity to energy density ratio lower than any other known liquid

Highly opaque to colored probes, quarks and gluons, but not to photons

Produces mesons and baryons with yield ratios and flow that suggests formation through quark coalescence from a hot thermal bath

RHIC/Physics/Puzzles

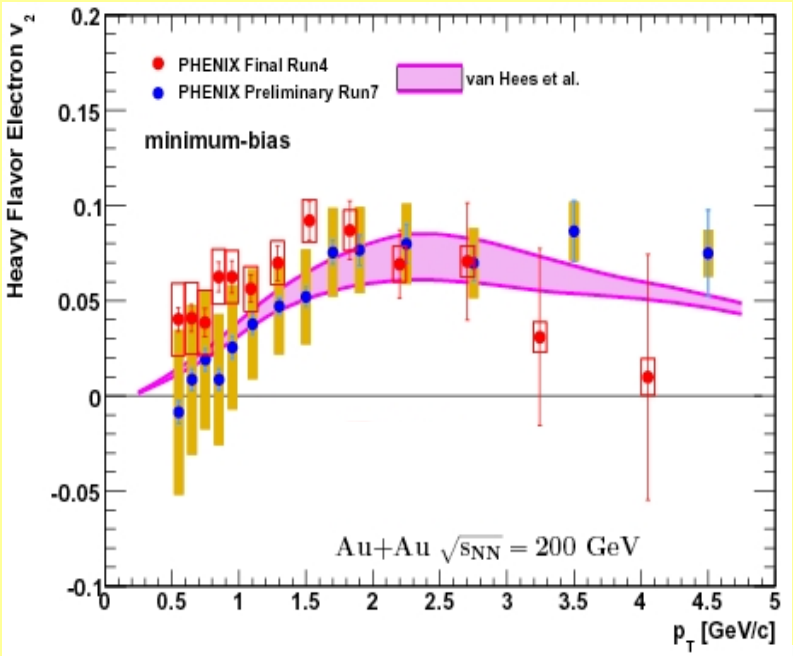

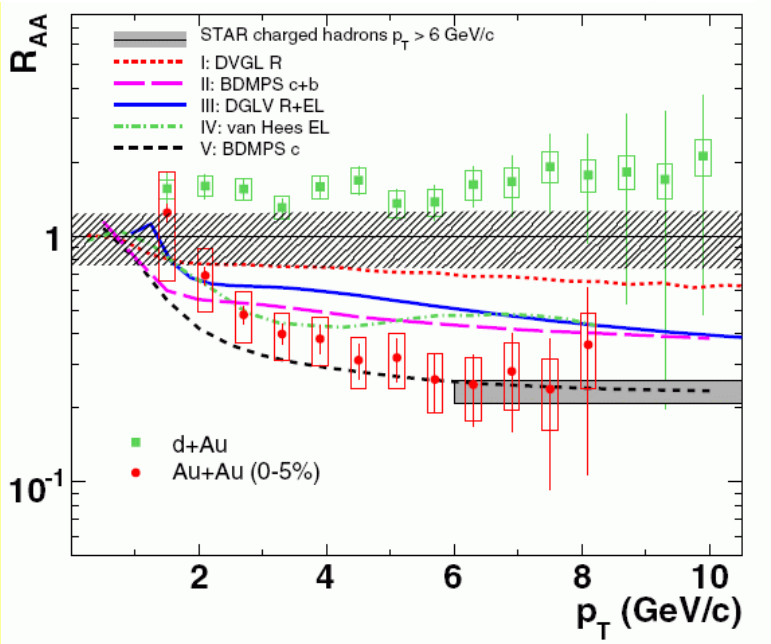

Non zero elliptic flow of electrons from heavy quark decay

Indicative for early thermalization

Expect significant Bottom contribution

Need direct topological reconstruction of heavy quark hadrons

Suppression of electrons from heavy quark decay

Same as for light hadrons >6Gev/c

Heavy quark in-medium energy loss?

Need direct topological reconstruction of heavy quark hadrons

HFT/Detector

2 active PiXeL layers

Intermediate Silicon Tracker

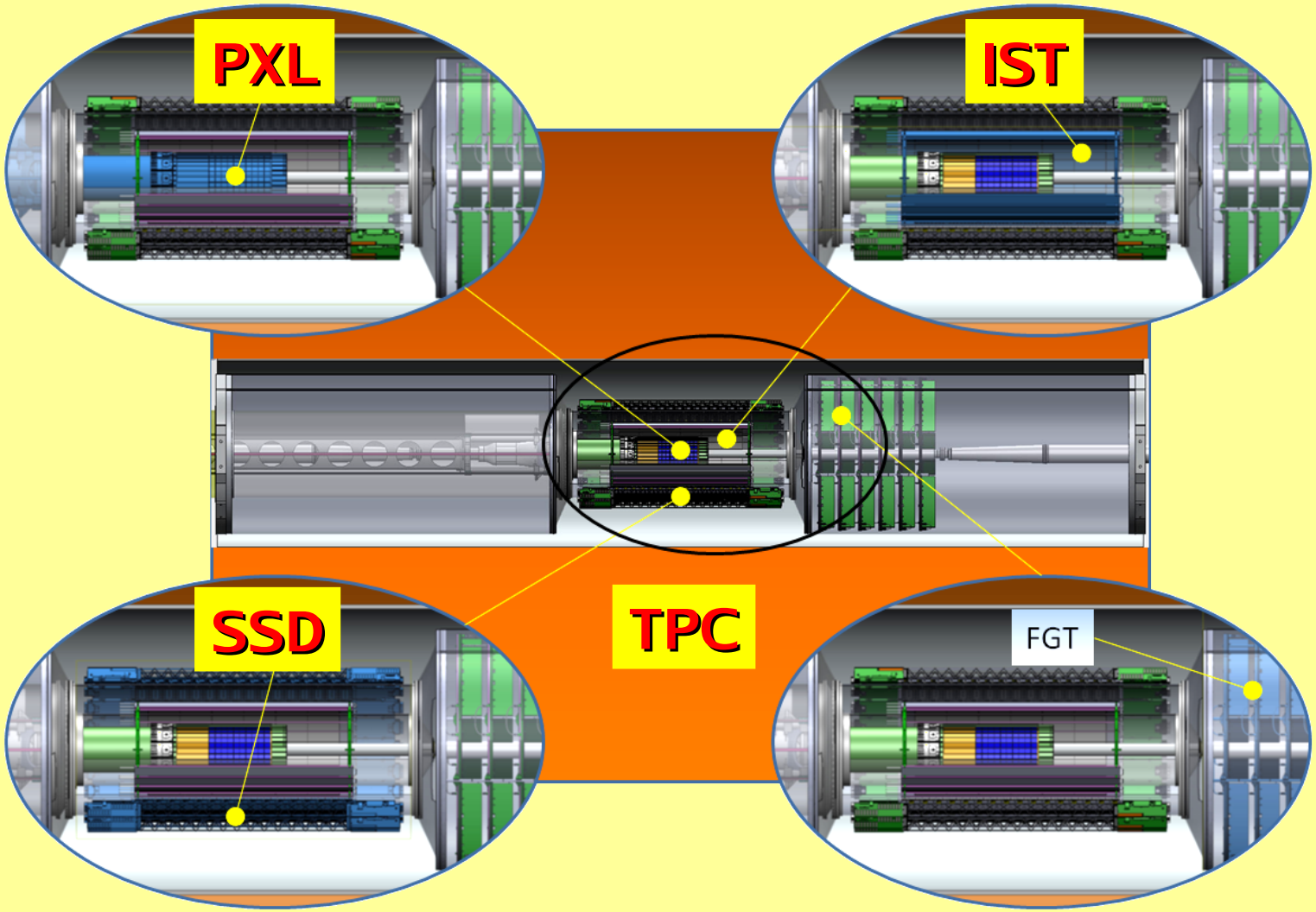

Silicon Strip Detector

TPC

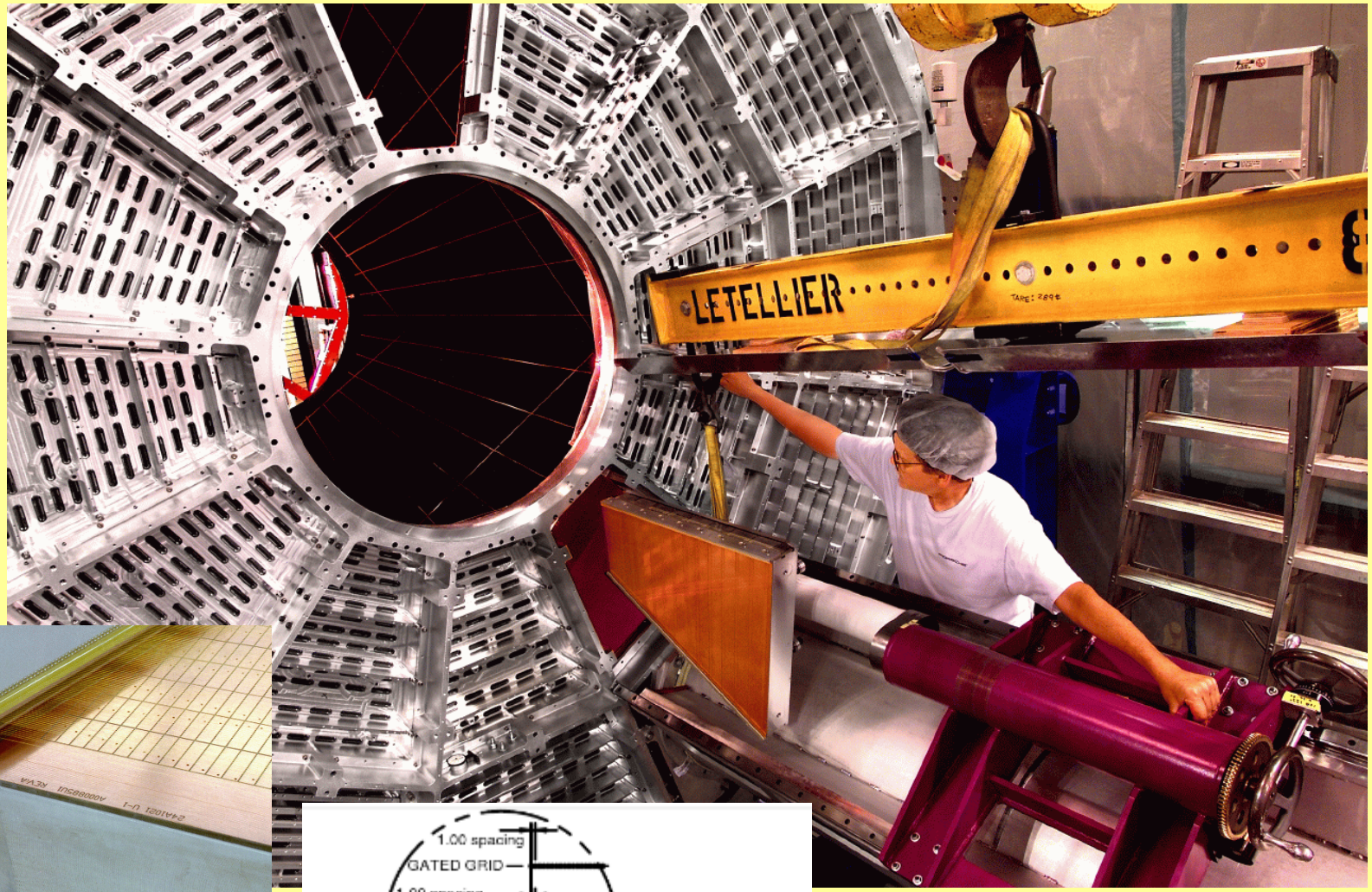

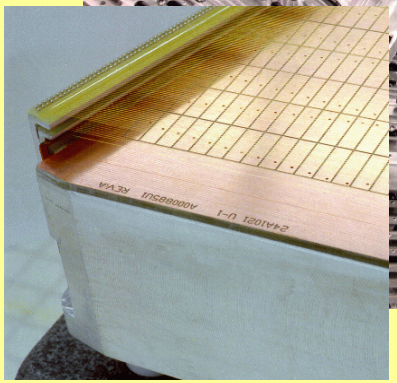

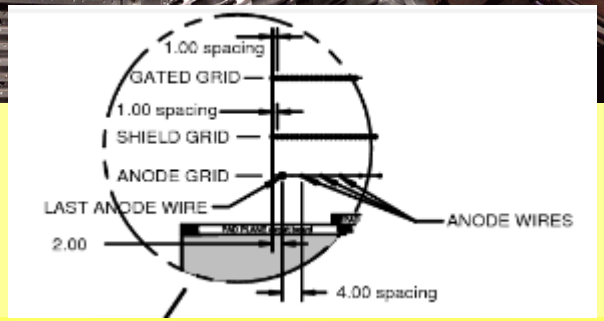

Large drift volume with MWPC readout sectors

TPC/RHICII

STAR TPC Review, June 4, 2009

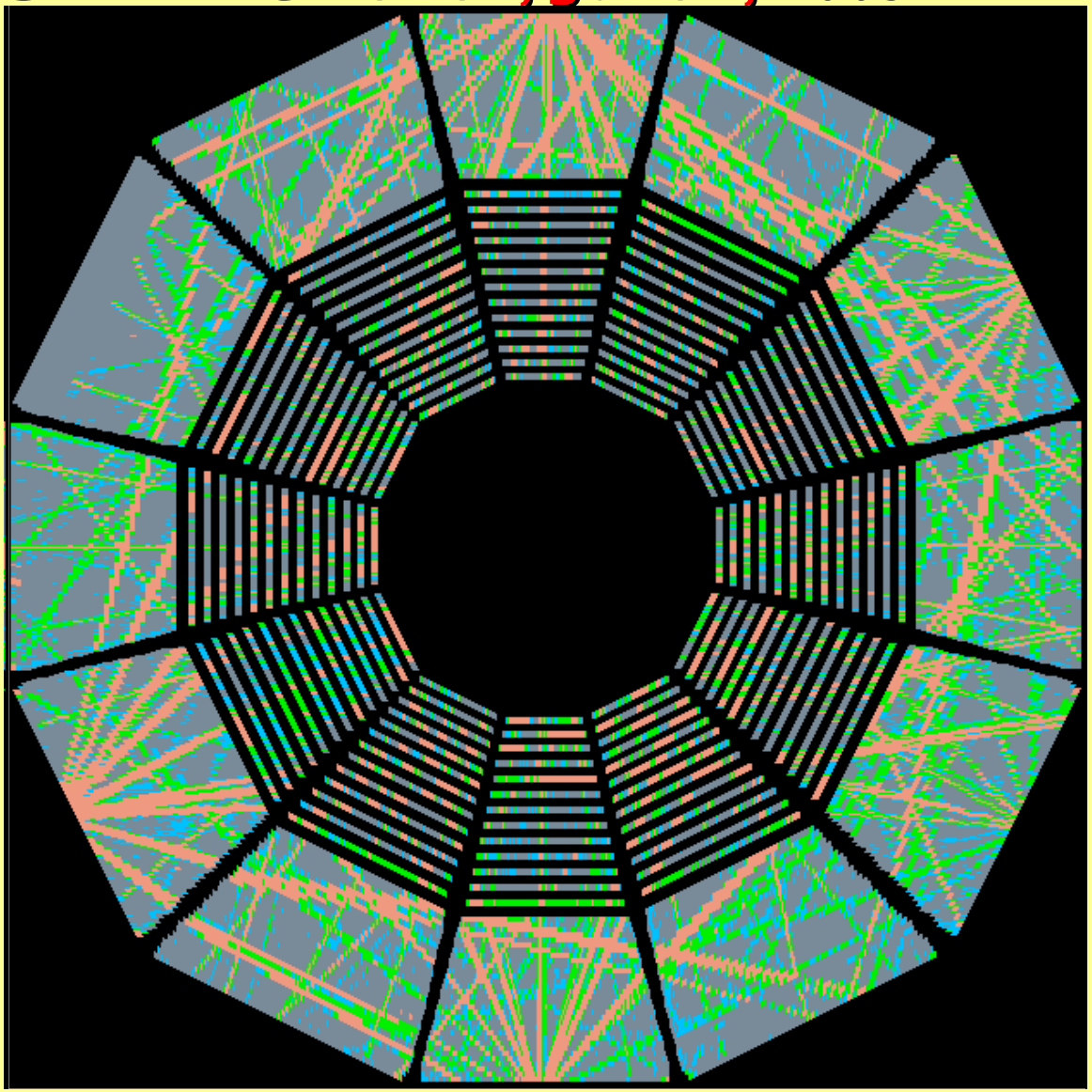

Jim Thomas

- Luminosity is up a factor of 3 compared to 2008 pp200 run, and expected to go up 4x in coming years
- Trigger rates can now go up a factor of 3 or more
- pp500 Multiplicities are 1.25x higher than in pp200
- So we are working with ~5x more charge in the TPC than ever before and STAR may ask for ~40x before we are done

TPC/TipToeing towards RHICII

The STAR TPC is an indispensable 'work horse' for the HFT

Run9: many anode trips due to too much charge and high trigger rates

- leads to unacceptable recovery downtime
- long term wire aging
- short term electronics failures

Mitigation:

- Reduce the gain by 2/3, no negative effect because new electronics has increased S/N from 20:1 to 30:1
- Limit the trigger rate
- Limit the luminosity

Real future meltdown:

- Switch off inner sectors (and let SSD and IST take over)
- Replace anode wires (can be done at high cost)
- Replace MWPC technology by GEM (even higher cost and R&D)

We must choose which options to pursue with care and wisdom

Gerrit van Nieuwenhuizen

HFT/SSD

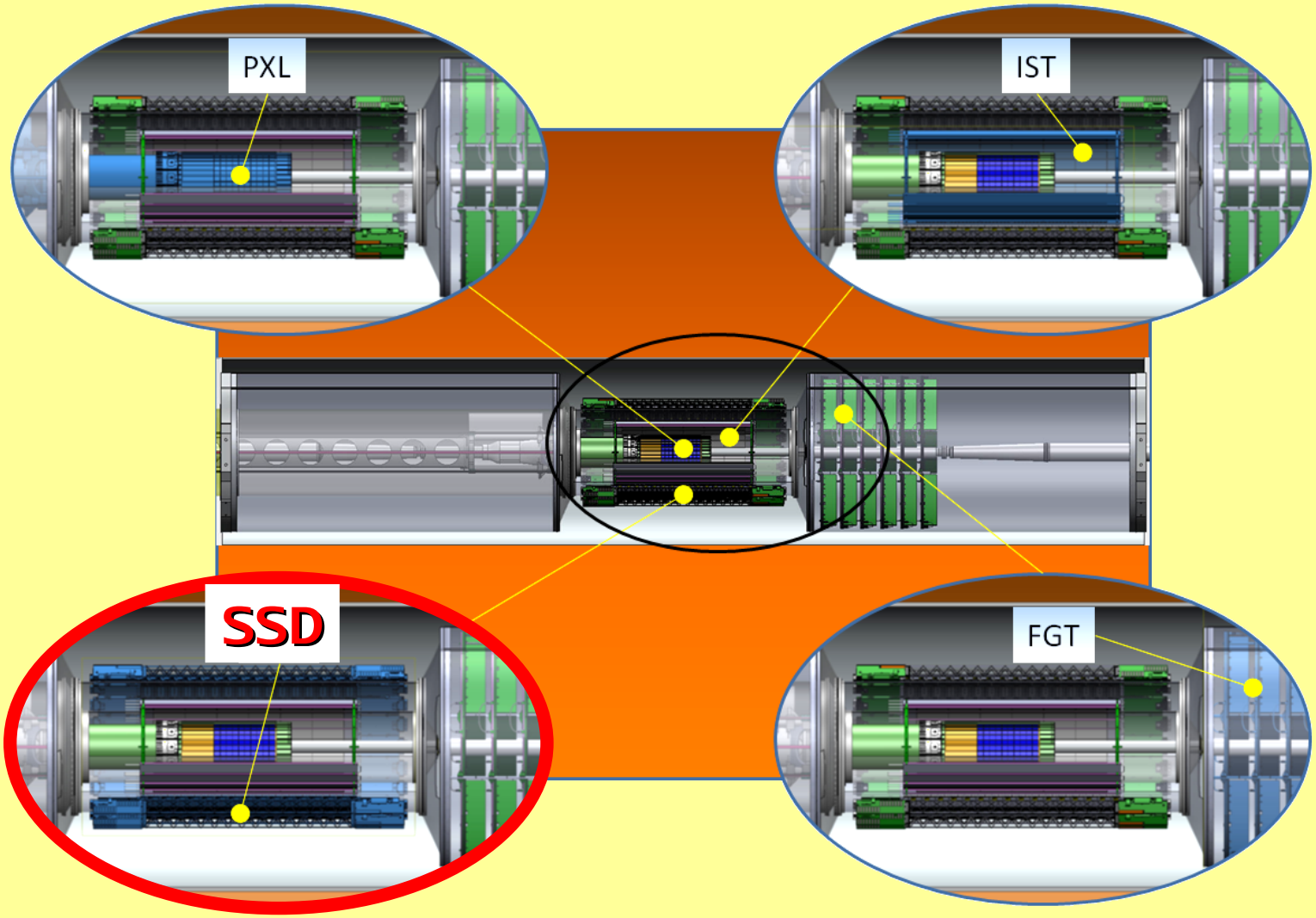

HFT/SSD/Specifications

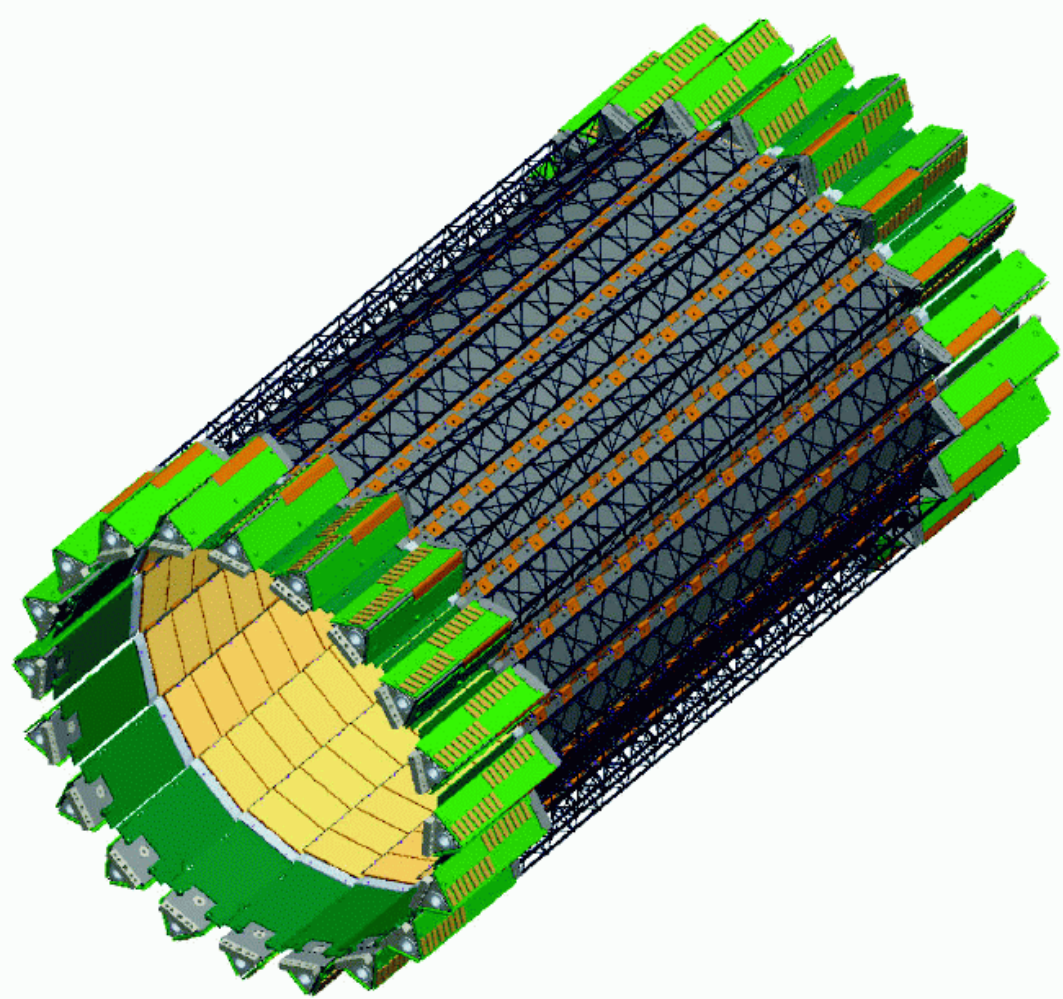

SSD Radius	22 cm
SSD Sensitive Length	67 cm
$\lvert\eta\rvert$ coverage	< 1.2
Number of ladders	20
Number of wafers/ladder	16
Total # of wafers	320
# of strips/wafer side	768
# of sides/wafer	2
Total # of channels	491520
Silicon wafer size	75×42 mm
Silicon wafer sensitive size	73×40 mm
Silicon thickness	300 μm
Strip pitch	95 μm
Stereo Angle	35 mrad
r-ϕ resolution	20 μm
z resolution	740 μm

HFT/SSD/Improvements

Make readout speed compliant with DAQ1000
- parallelize digitization
- increase sampling speed
- increase data transfer speed and use buffers

→ 9% dead at 500Hz (old dead time ~ 60—70%)

Tiling instead of castellating the ladders
- improves hermiticity
- all ladders at same radius and tilt angle
- simplifies mechanical design

Improve reliability of air cooling
- use more rigid air lines to prevent squashing
- air suction from East side only
- use higher capacity 'vacuum cleaner'

SSD easily survives >10 years of 500GeV p+p
- 3.5 krad/year for 500GeV p+p at R=22cm
- rad limit is about 200 krad, mainly readout chip

HFT/IST

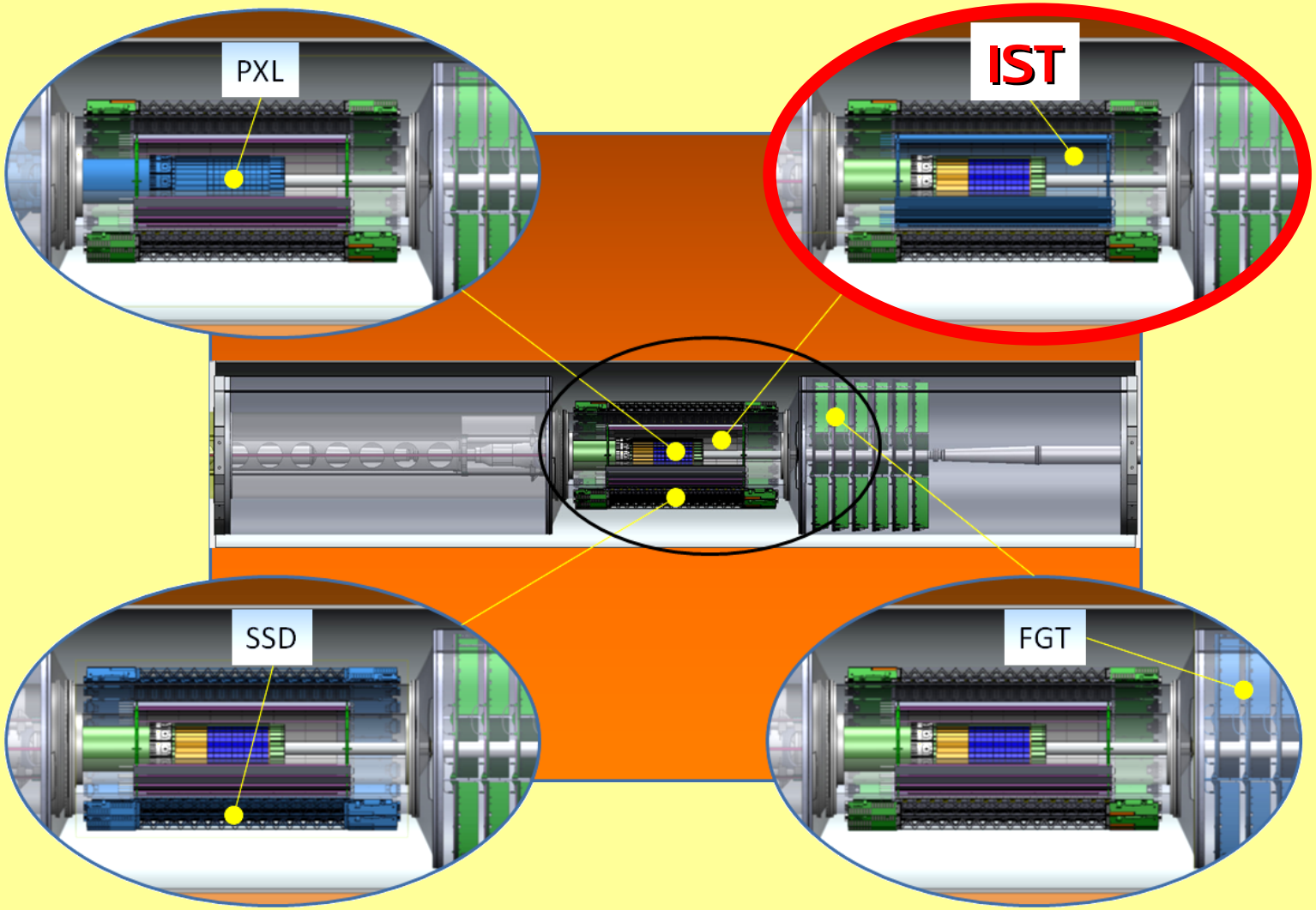

HFT/IST/Overview

- Acceptance:
  - -1.2 < η < + 1.2 (97.8% spatial coverage)
- Radiation length:
  - < 1.5%
- Readout speed:
  - Resolve RHIC beam bunch crossing (107ns)
- Radiation load:
  - Survive 10 years of RHIC operation: ~30kRad/year
- Hit requirements:
  - < 2% occupancy
  - < 1% double hit probability

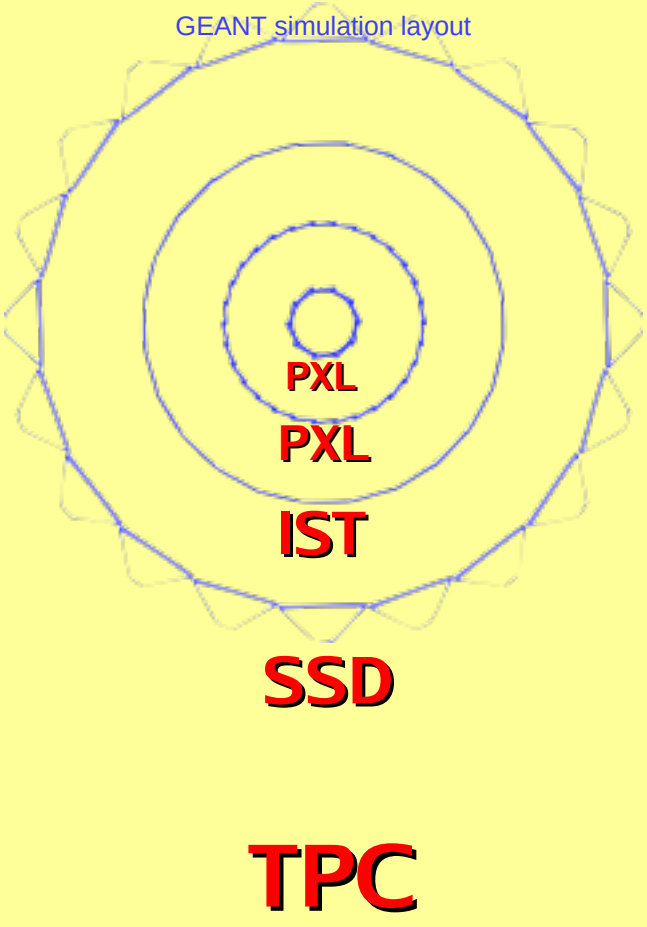

- 1-layer IST system
- Conservative choice of complete layout
- Hybrid: Kapton-based / Carbon-fiber support material
- Ladders: Profit from ATLAS experience
- Sensors: Silicon pad sensors - Well proven technology and understood / LNS experience
- FEE: Based on APV25-S1 chip Basic Hybrid design exists
- DAQ: Profit from parallel FGT readout system development

HFT/IST/Specifications

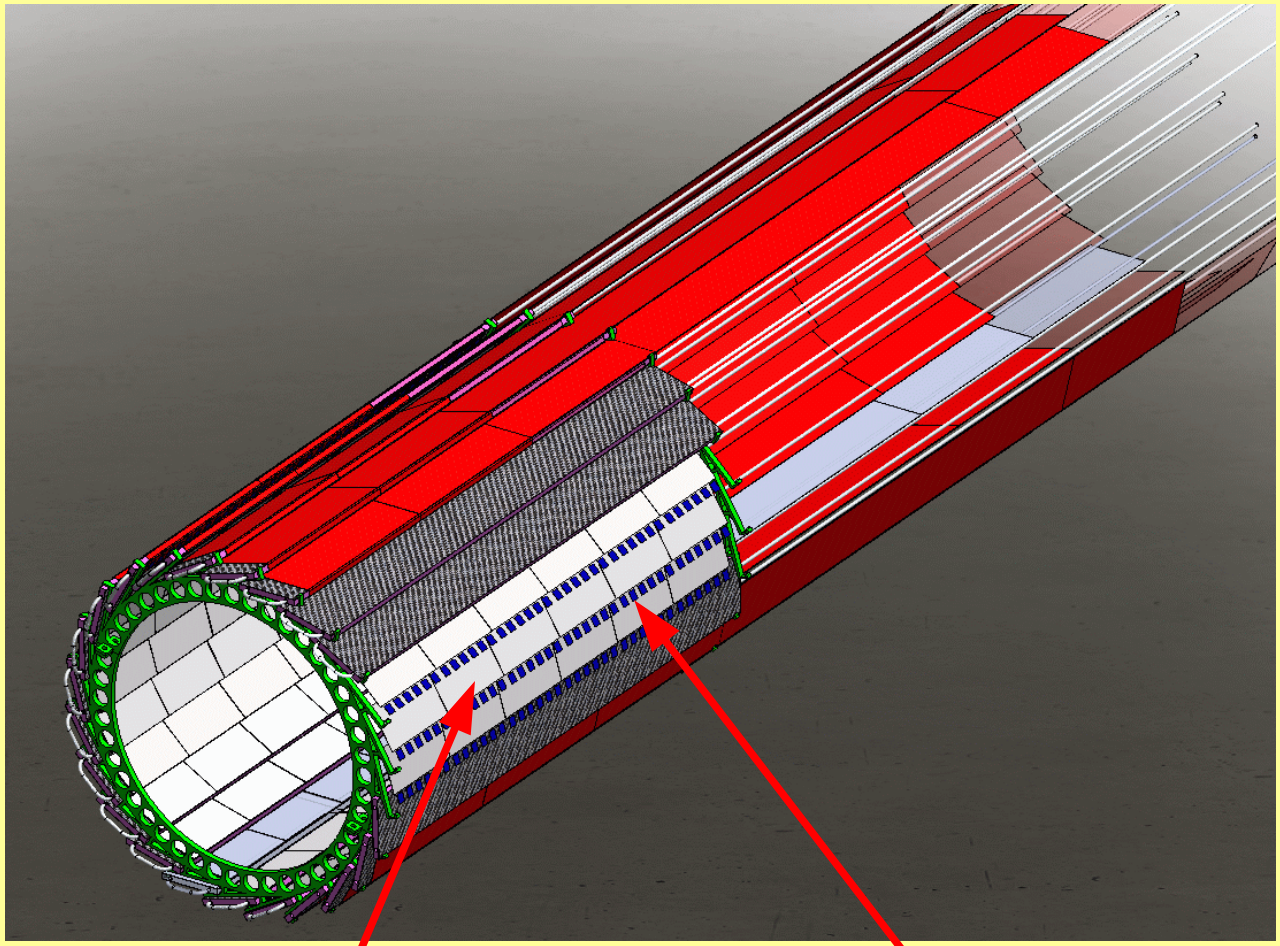

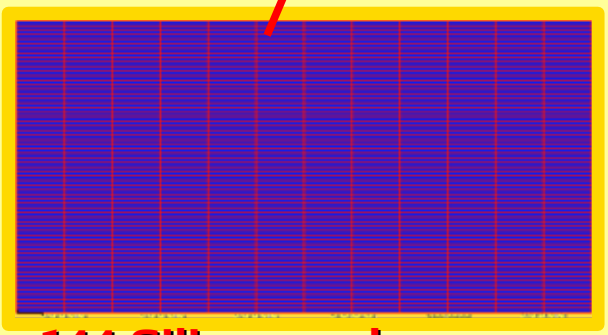

144 Silicon pad sensors

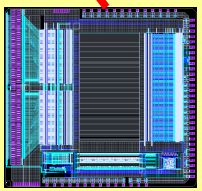

864 APV25-S1

Radius	14 cm
Length	50 cm
Number of ladders	24
Number of hybrids	72
Number of sensors	144
Number of readout chips	864
Number of channels	110592
R-ϕ resolution	172 μm
Z resolution	1811 μm

HFT/IST/Optimizing

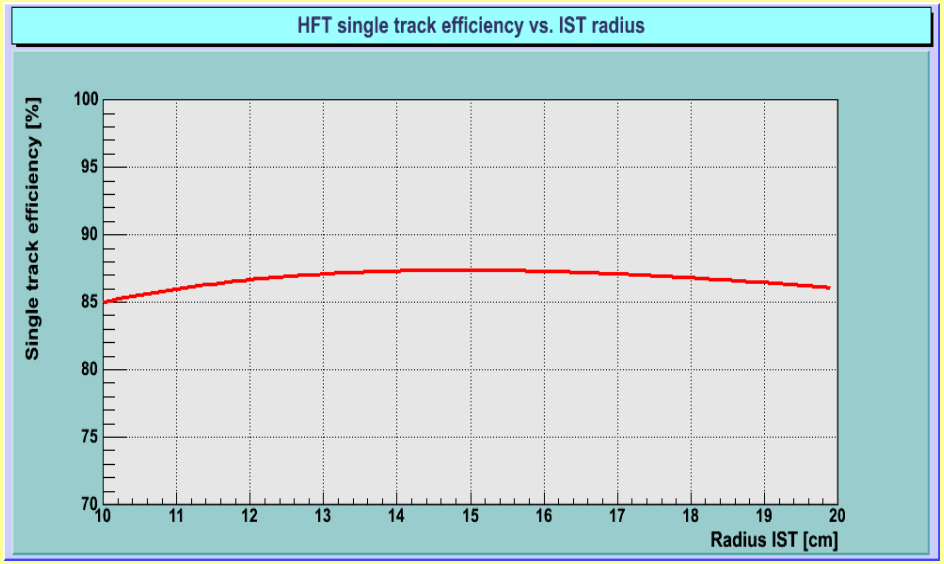

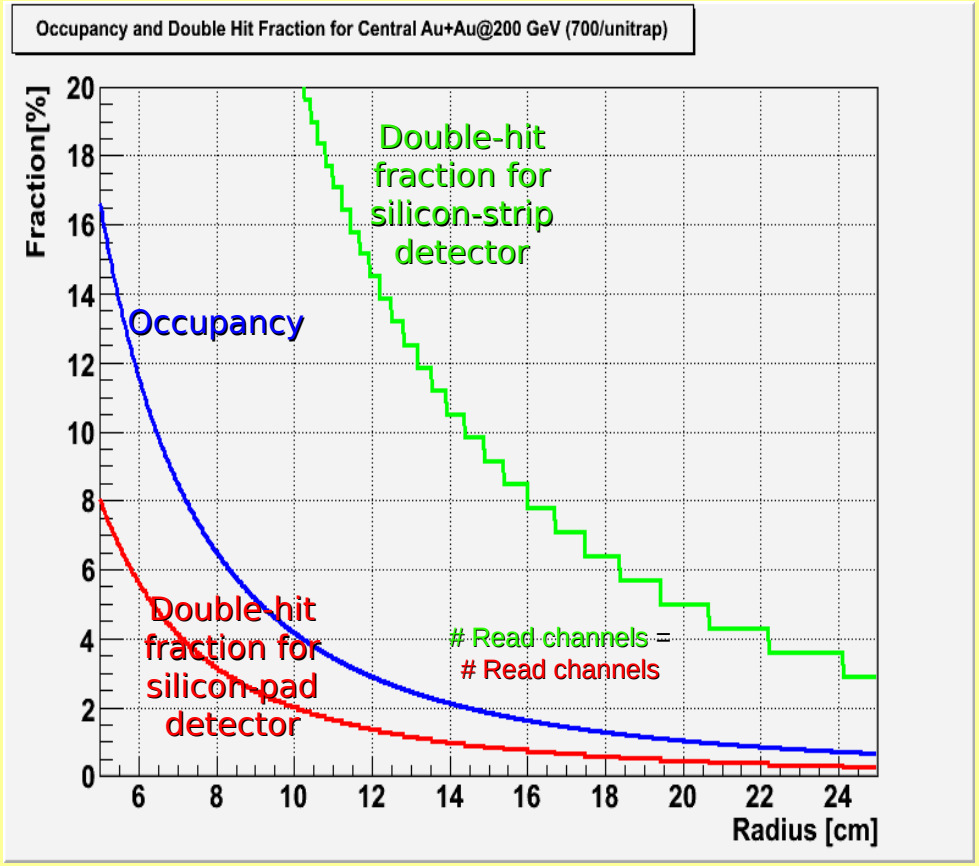

- Choice of radius of r=14cm yields optimized single track efficiency / Fairly insensitive to single track efficiency

- Silicon pad structure preferred over silicon strip layout to reduce amount of double-hit fraction in central Au-Au collisions at 200GeV CME (700 particles per unit rapidity)
- Occupancy for silicon pad layout is ~ 2% at r=14cm

HFT/IST/Efficiency

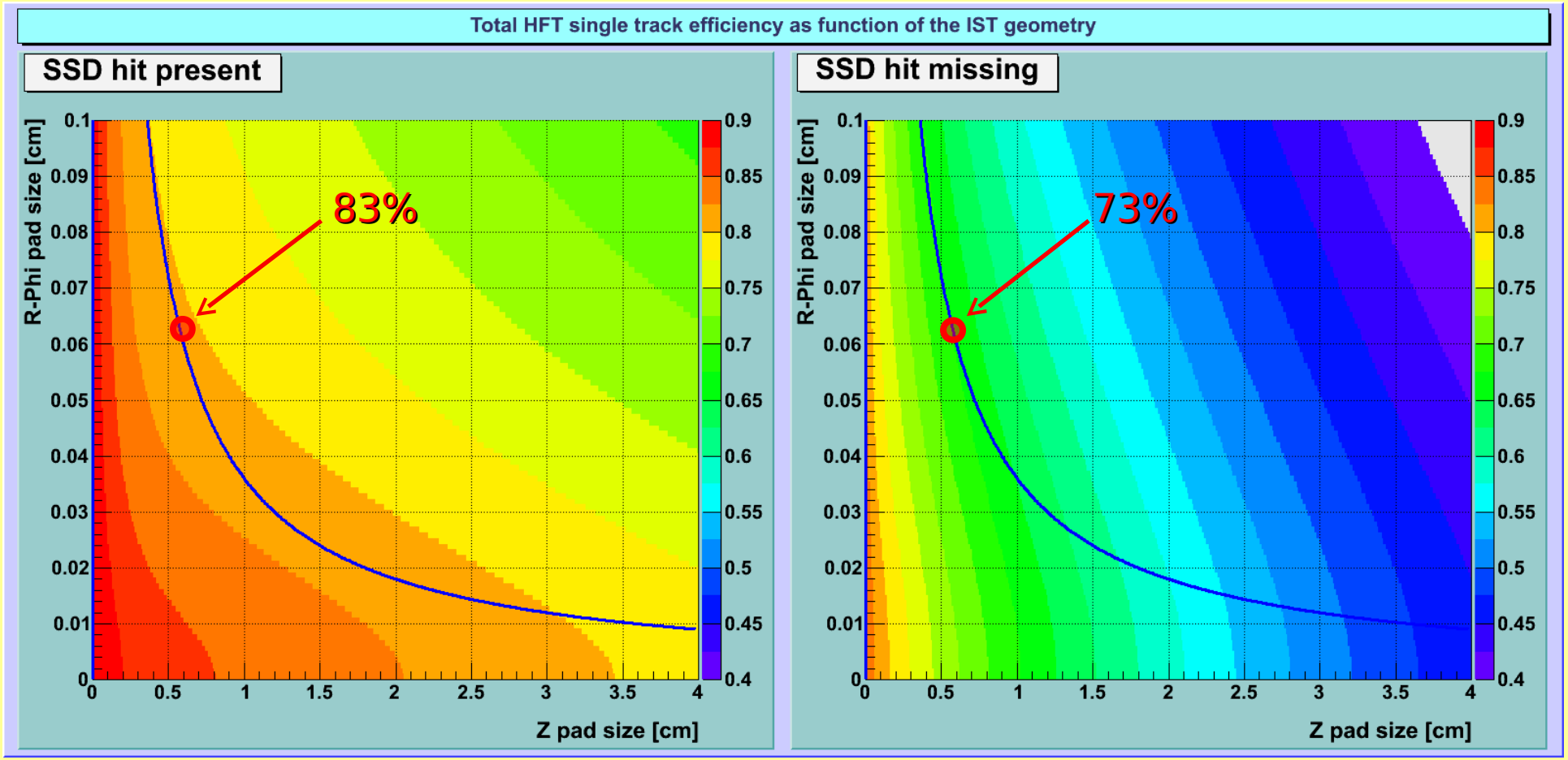

- 6 APV chips per sensor (768 channels) yields excellent efficiency with (without) SSD of 83% (73%)
- In comparison: 50% for TPC
- Efficiency relatively insensitive to changes in number of readout chips and layout of silicon pad sensors

HFT/IST/Technology

Module:

- 2 Silicon-pad sensors (Double-metal layer, AC coupled) 7.69cm X 4.0cm
- Light-weight Hybrid (Kapton-based / Carbon-fiber support material)
- Readout Chip: APV25-S1

Silicon-pad sensor

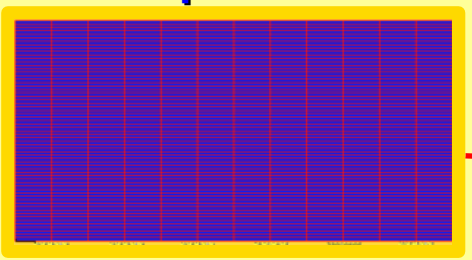

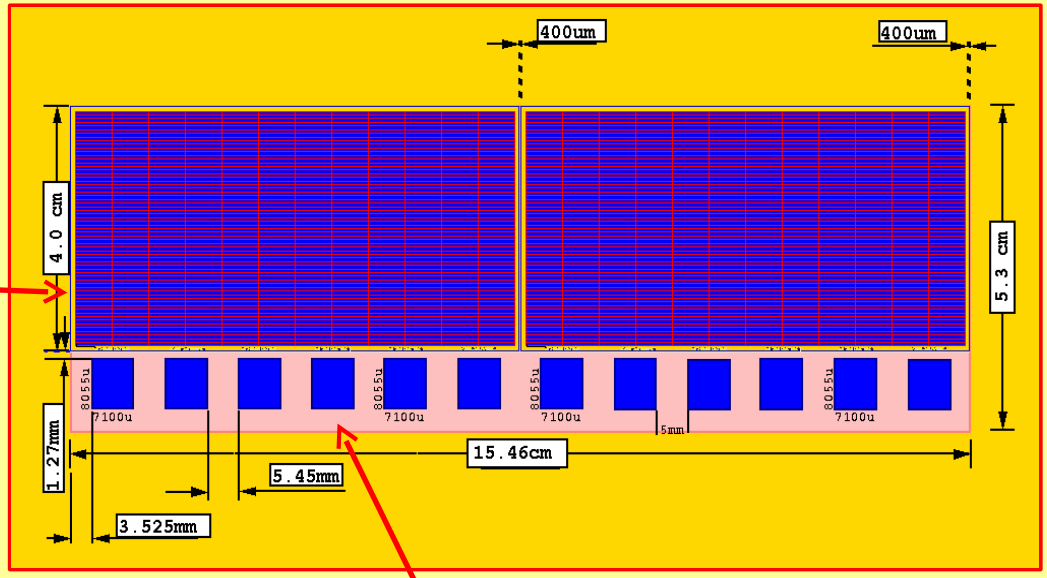

- Pad size structure:
  6275µm X 596µm
- 6 APV-S1 chips per sensor

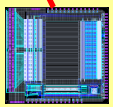

APV25-S1 Readout Chips

Bonding pads

Metal signal lines

Silicon pads

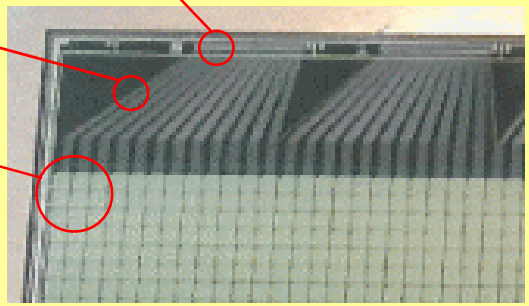

(Example: PHOBOS silicon pad sensor)

Conservative technology
Multiple vendors (quote from Hamamatsu)
Expertise and labs at MIT-LNS

HFT/IST/Radiation_Length

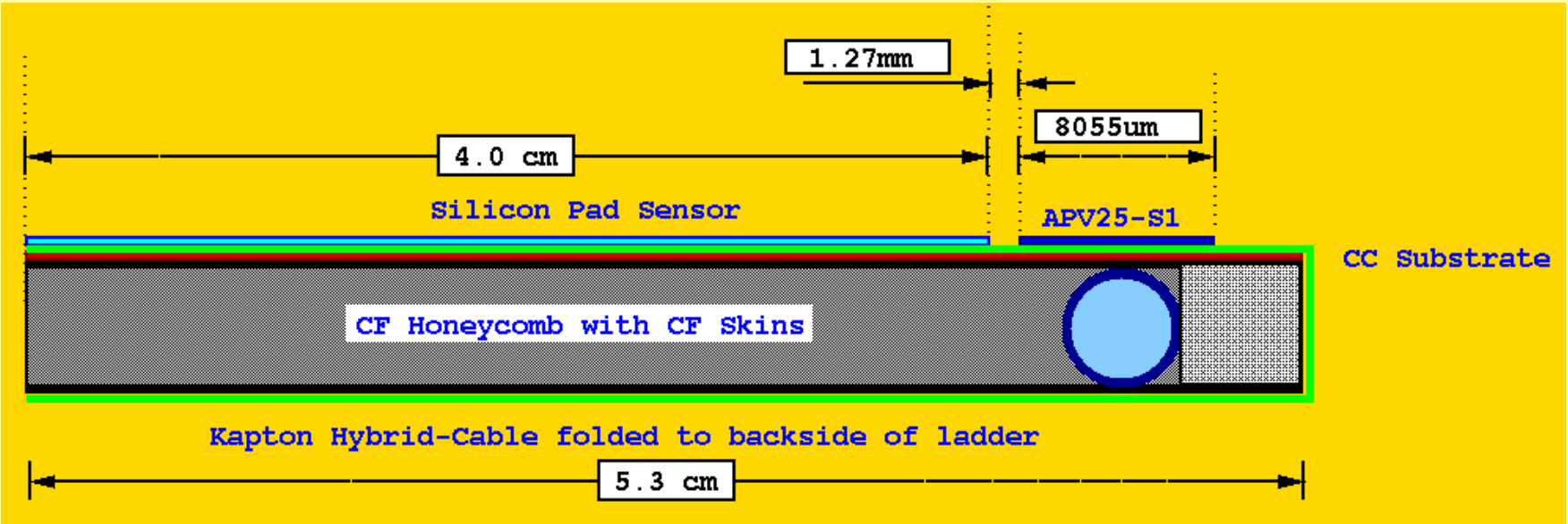

Readout chip	0.049%
CF honeycomb	0.060%
Cu traces hybrid/cable	0.18%
CF skin + glue	0.11%
CF skin + glue	0.11%
Carbon-Carbon core	0.23%
Silicon sensor	0.24%
Cooling water	0.05%
Al cooling tube	0.08%
Kapton	0.07%

- **Averaged radiation length over 5.3cm width: ~1.2% X_0**

HFT/IST/Prototypes

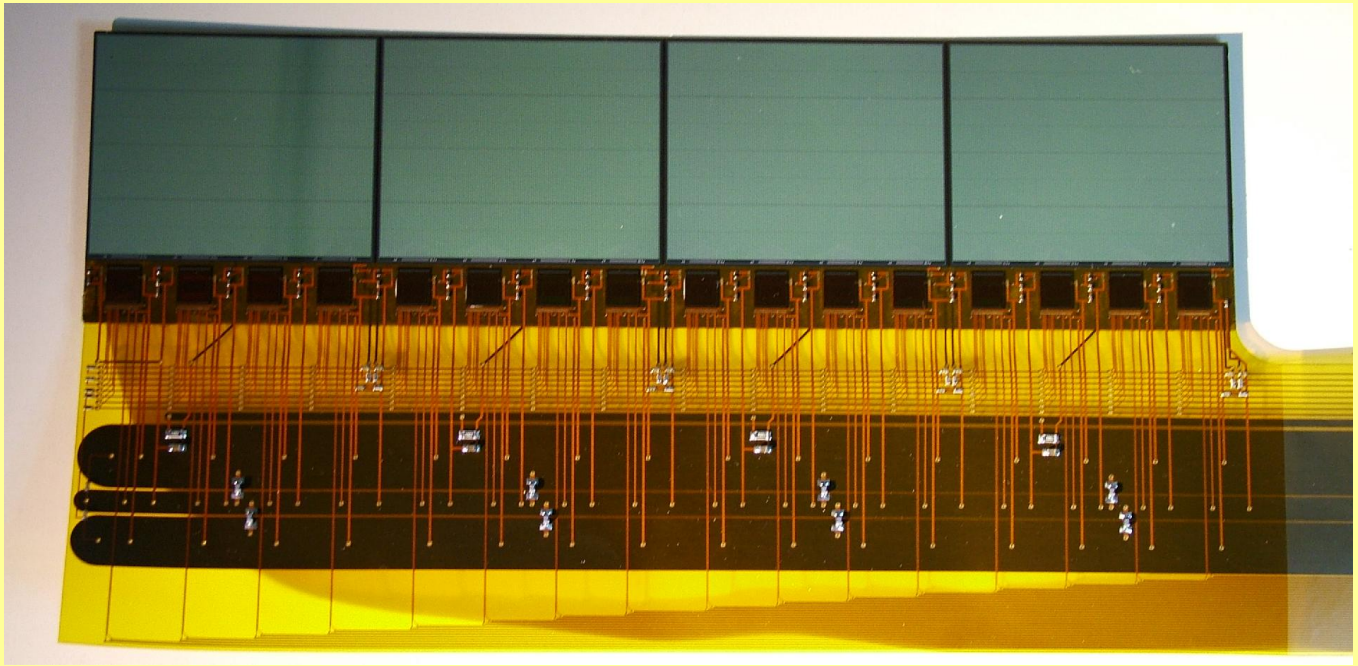

- 4 PHOBOS 512 channel pad sensors
- 16 APV25-S1 readout chips
- 75µm thick Kapton hybrid with 60cm long tail - Assembled at MIT
- Wire bonded at BNL's Instrumentation Division
- 2 prototypes have been assembled
- 1 partially bonded prototype currently being tested
- Don Pinelli waiting for fine pitch bonding tools

HFT/IST/Readout_Chip

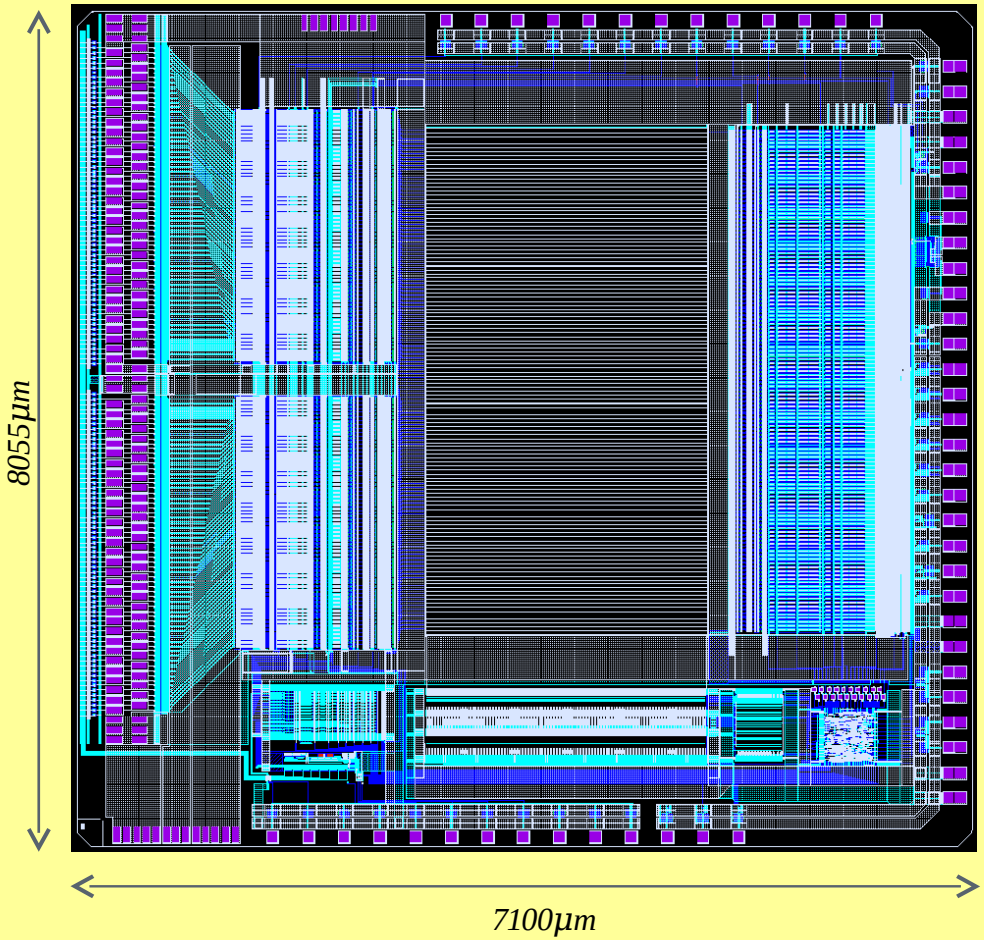

- Developed for CMS (75000 in CMS tracker) and also used by COMPASS for triple-GEM detector readout
- 0.25µm CMOS
- 128 channels
- 40 MHz sampling rate
- 4µs analogue pipeline
- 11:1 Signal / Noise
- 0.3 Watt / chip
- Radiation hard

- 'Off-the shelf' readout chip: APV25-S1
- Used for STAR IST, FGT and pp2pp (1 readout system)!

HFT/IST/Readout_System

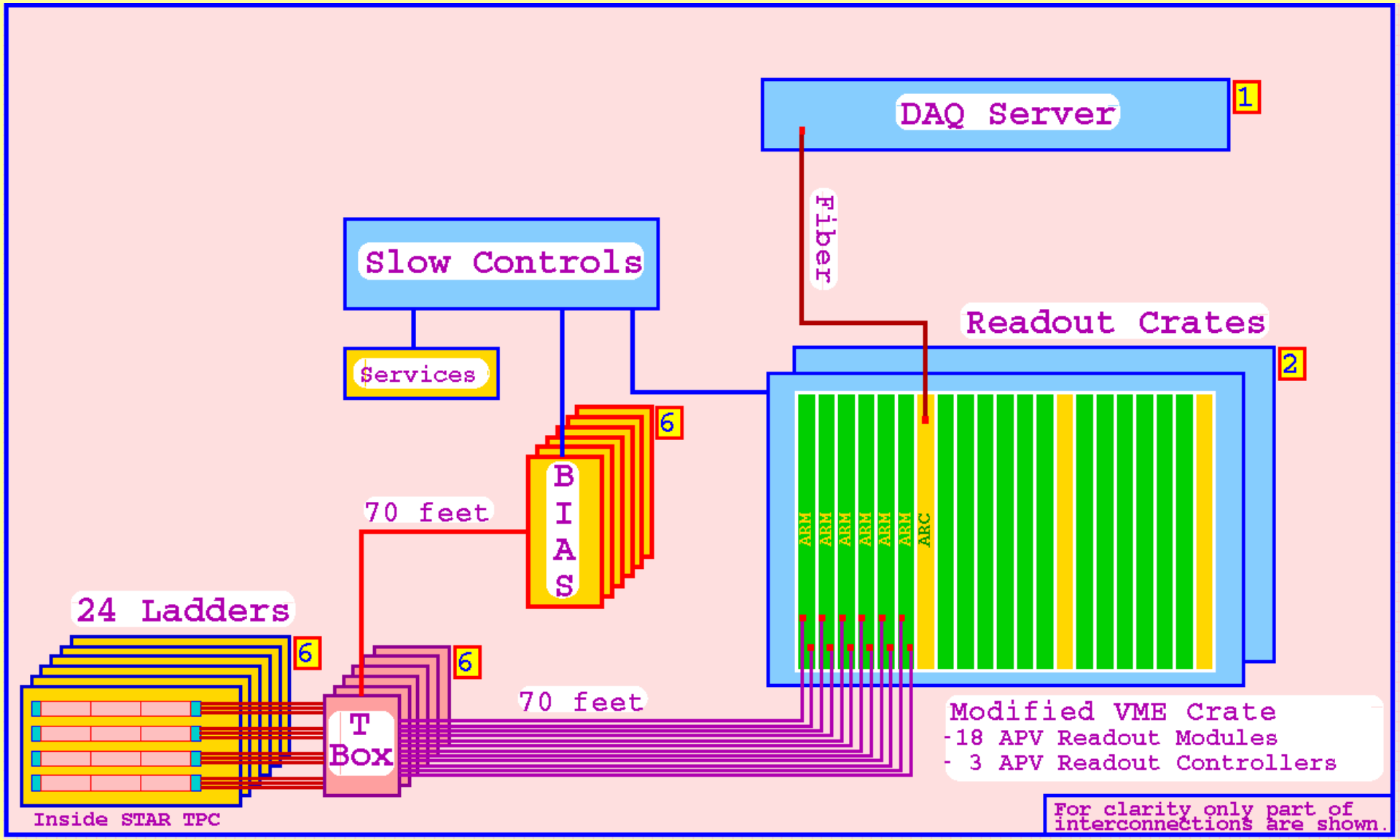

First prototypes of ARM/ARC system ready May/June 2010.

HFT/IST/Mechanical_Support

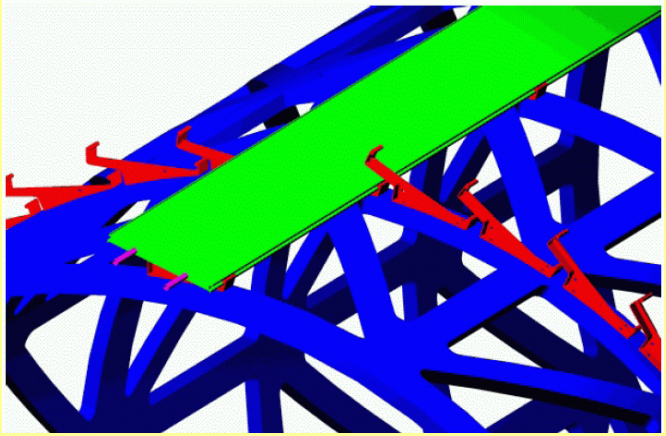

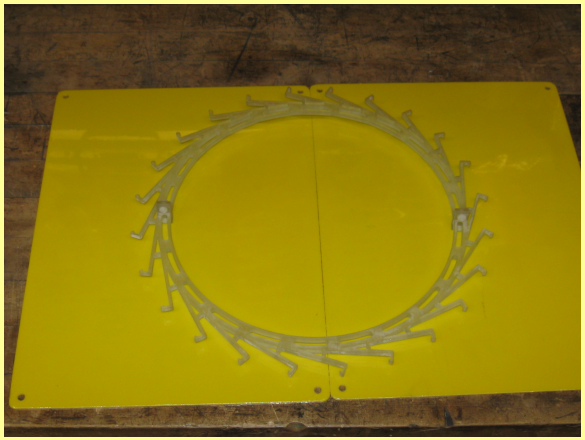

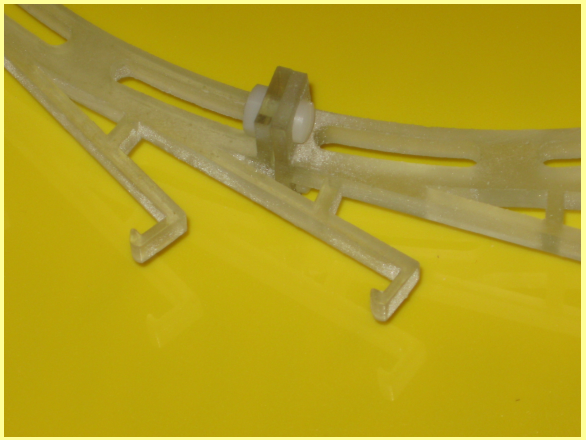

- Prototype ladder produced at LBNL: Carbon fiber honeycomb with carbon fiber skins (80cm / Current design is 50cm)
- 1 cooling channel
- Prototype ladder support rapid prototyped
- Support mechanism: Click-in / Lock-in of ladders

Gerrit van Nieuwenhuizen

HFT/Detector/PXL

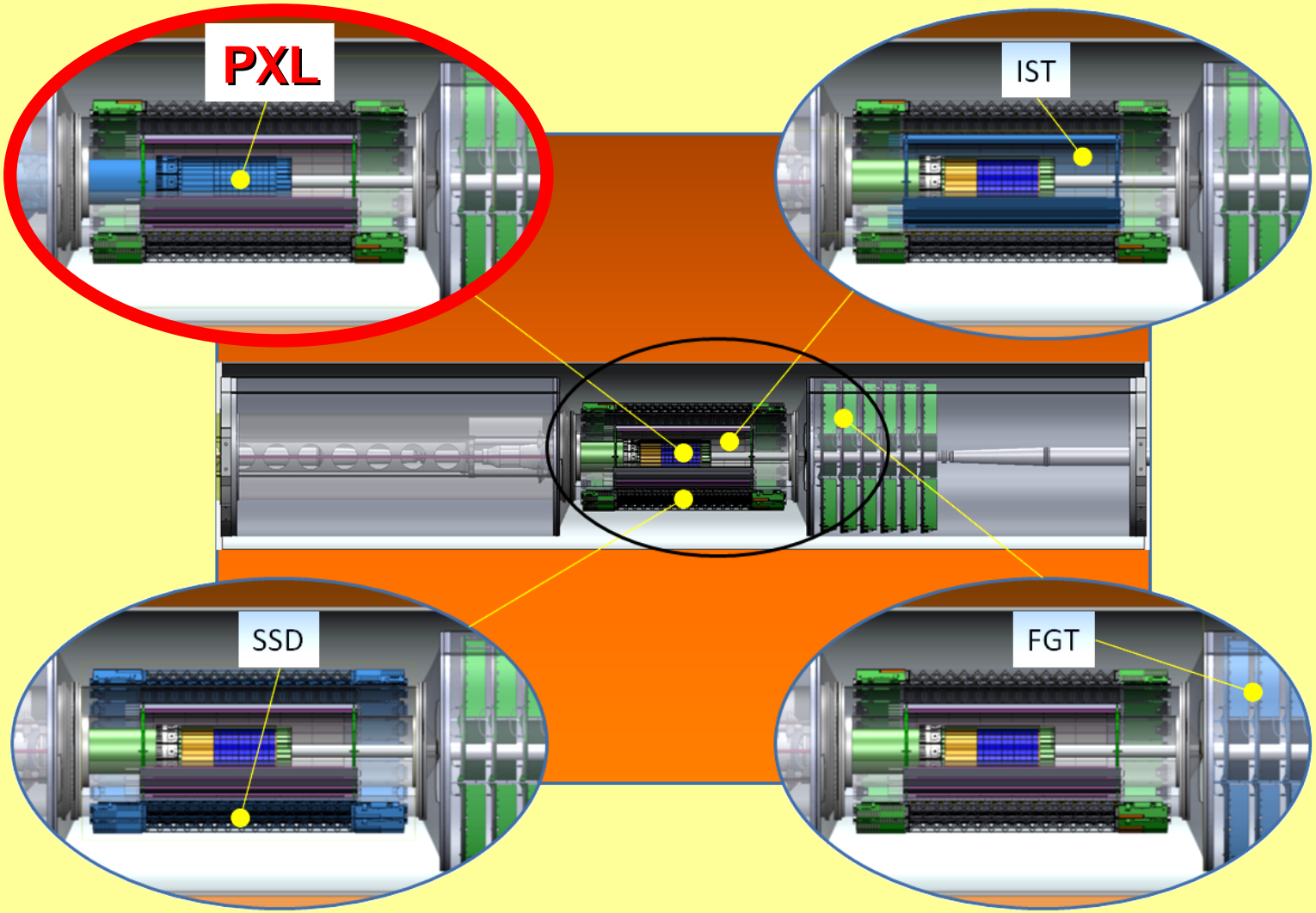

HFT/PXL/Specifications

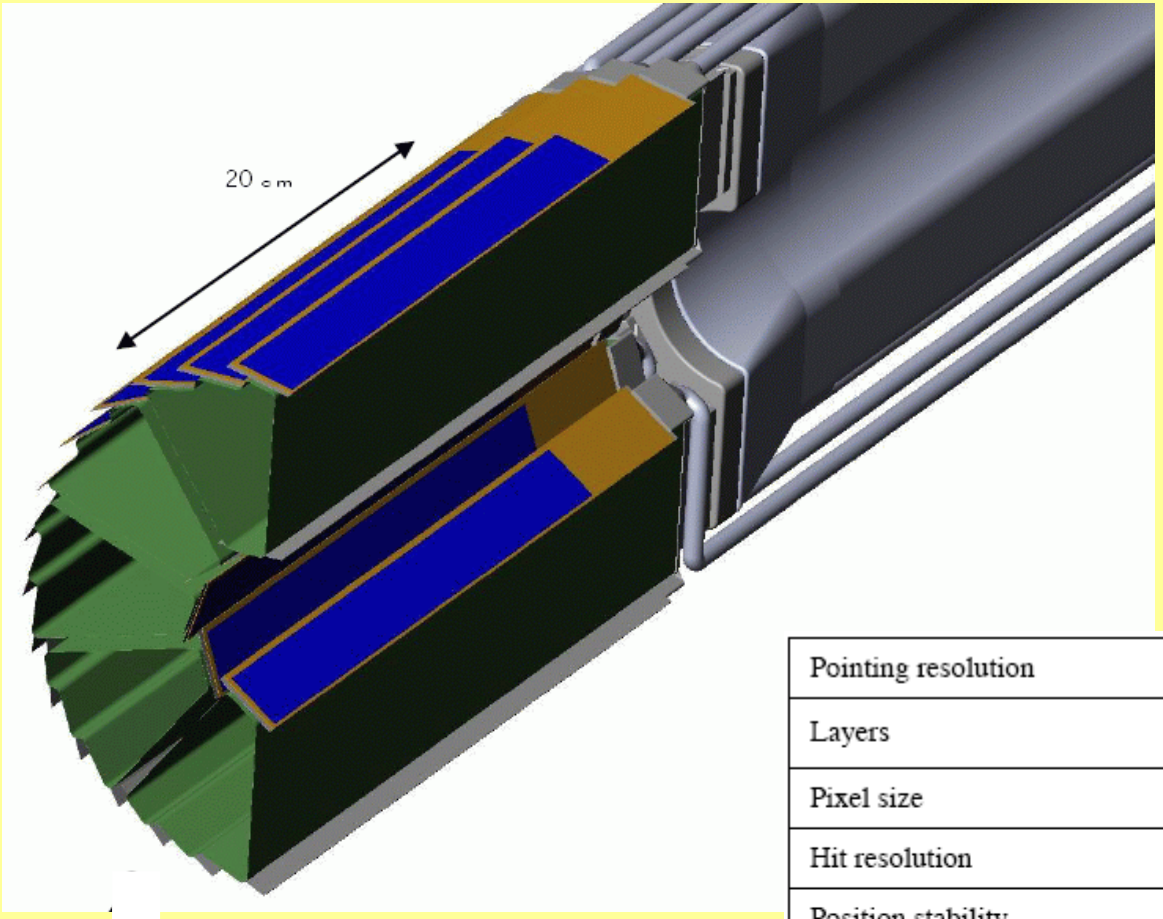

Pointing resolution	(13 ⊕ 22GeV/p·c) μm
Layers	Layer 1 at 2.5 cm radius Layer 2 at 8 cm radius
Pixel size	18.4 μm × 18.4 μm
Hit resolution	10 μm rms
Position stability	6 μm (20 μm envelope)
Radiation thickness per layer	$X/X_0 = 0.37\%$
Number of pixels	~436 M
Integration time (affects pileup)	0.2 ms
Radiation tolerance	300 kRad
Rapid installation and replacement to cover radiation damage and other detector failure	Installation and reproducible positioning in 8 hours

HFT/PXL/Technology

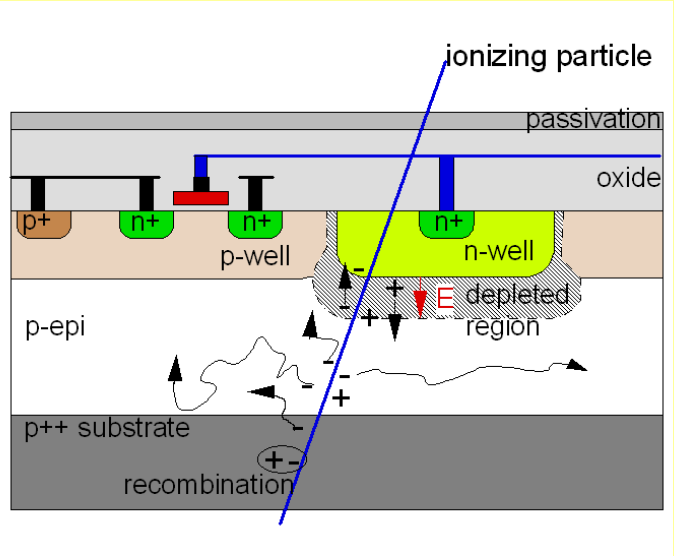

- Standard commercial CMOS technology
- Room temperature operation
- Sensor and signal processing are integrated in the same silicon wafer
- Signal is created in the low-doped epitaxial layer (typically ~10-15 µm) → MIP signal is limited to <1000 electrons
- Charge collection is mainly through thermal diffusion (~100 ns), reflective boundaries at p-well and substrate → cluster size is about ~10 pixels (20-30 µm pitch)
- 100% fill-factor
- Fast readout
- Proven thinning to 50 micron

HFT/PXL/Development

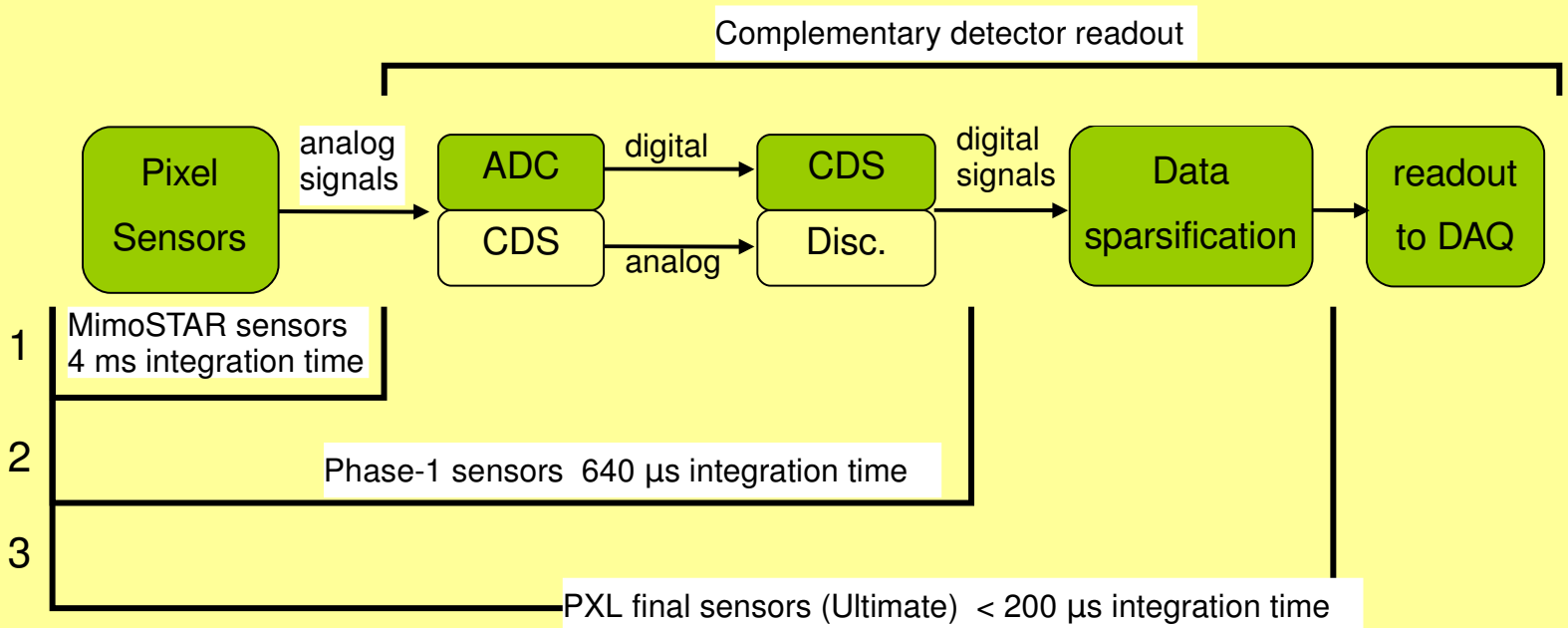

HFT/PXL/EndGame

Final PXL Sensor

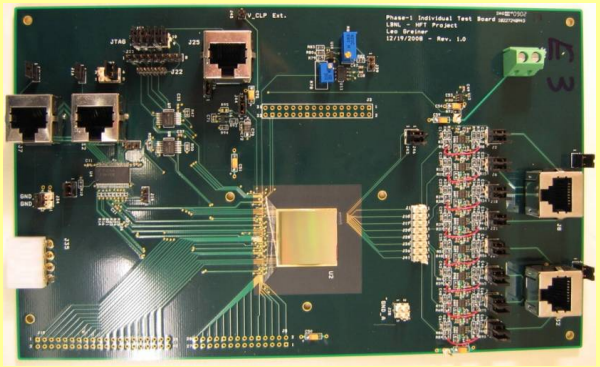

Phase-1

+

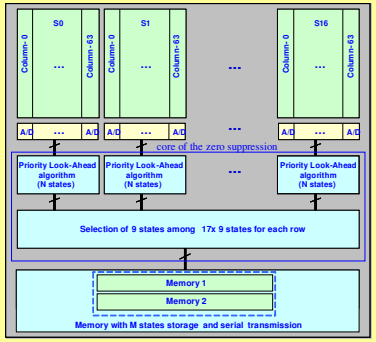

SUZE – Zero suppression
(prototype successfully tested 04/2008)

Last phase → Ultimate sensor

- Overall design is in progress and nearly complete.
- 18.4 μm pixels have been chosen for enhanced radiation tolerance.
- Triggered detector system fitting into existing STAR infrastructure (Trigger, DAQ, etc.)
- Deliver full frame events to STAR DAQ for event building at approximately the same rate as the TPC (1 kHz for DAQ1000).
- Have live time characteristics such that the Pixel detector is live whenever the TPC is live.
- Reduce the total data rate of the PXL detector to a manageable level (< TPC rate of ~1MB / event).

HFT/PXL/Readout

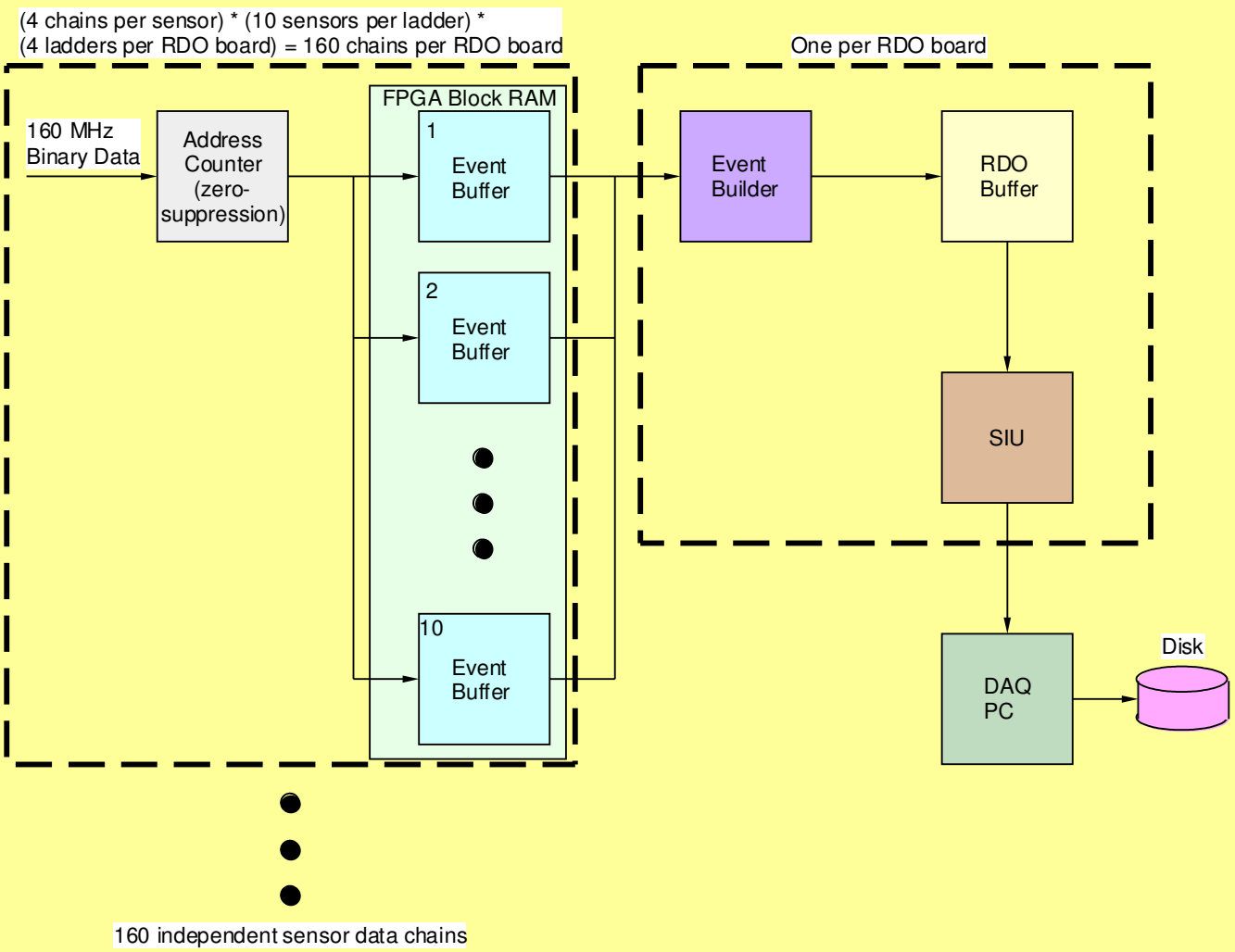

Easy to reconfigure FPGA firmware to adapt to final sensors

HFT/PXL/Mechanics

Maintain a 20um internal calibration
→ Lots of simulations and material tests are on the way

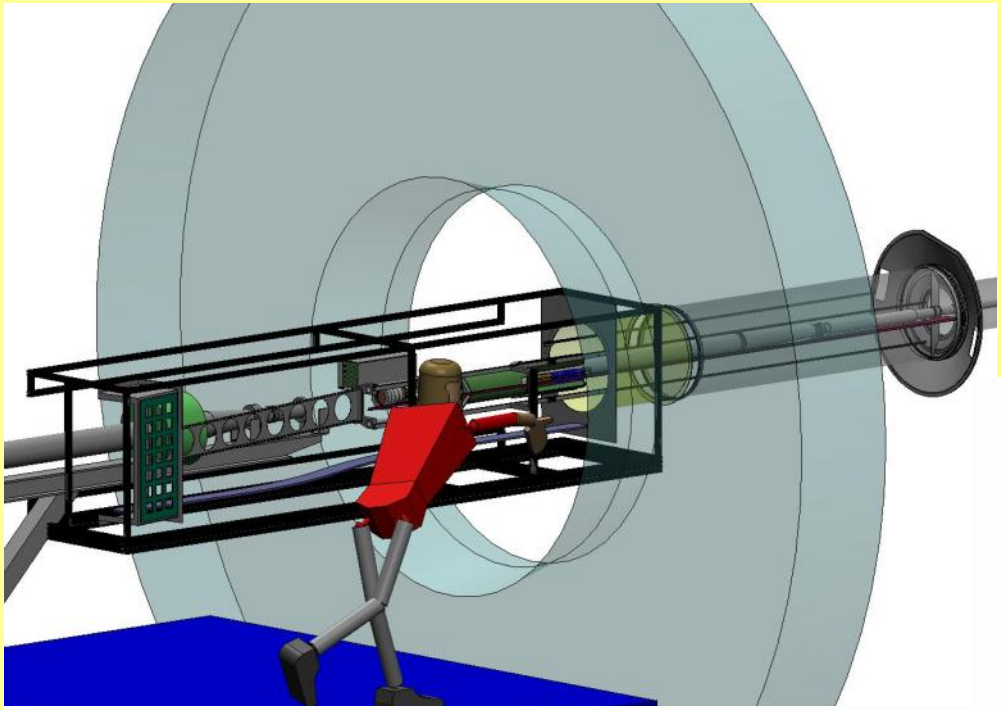

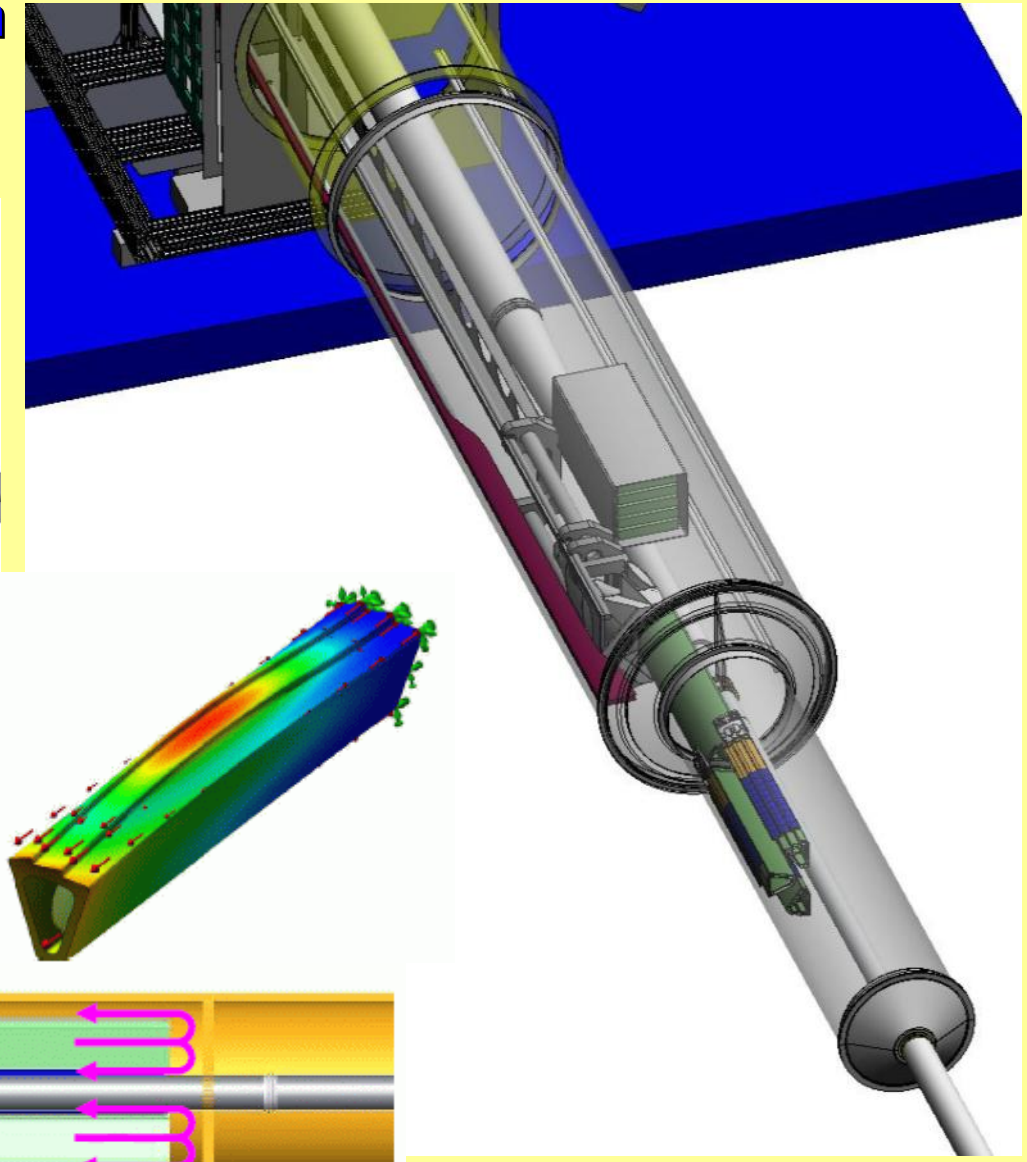

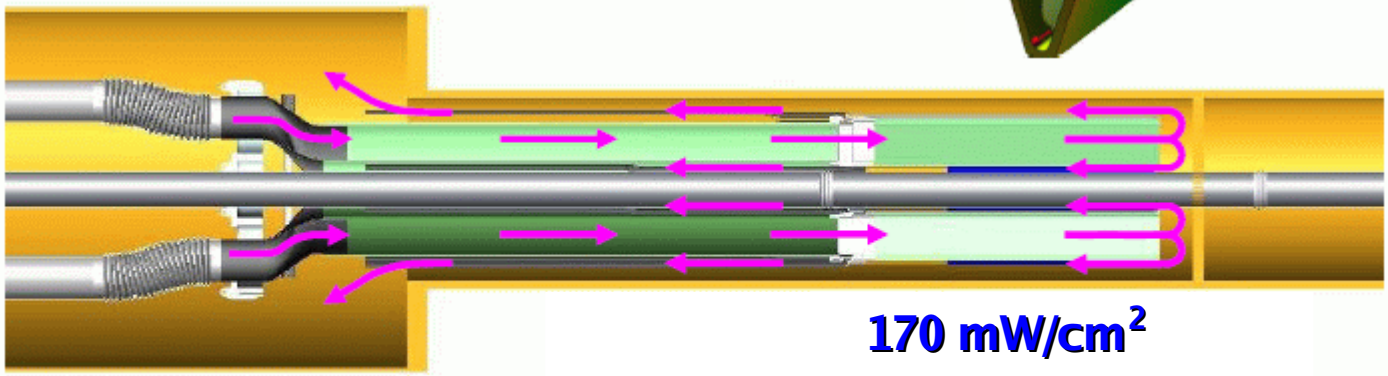

HFT/Support

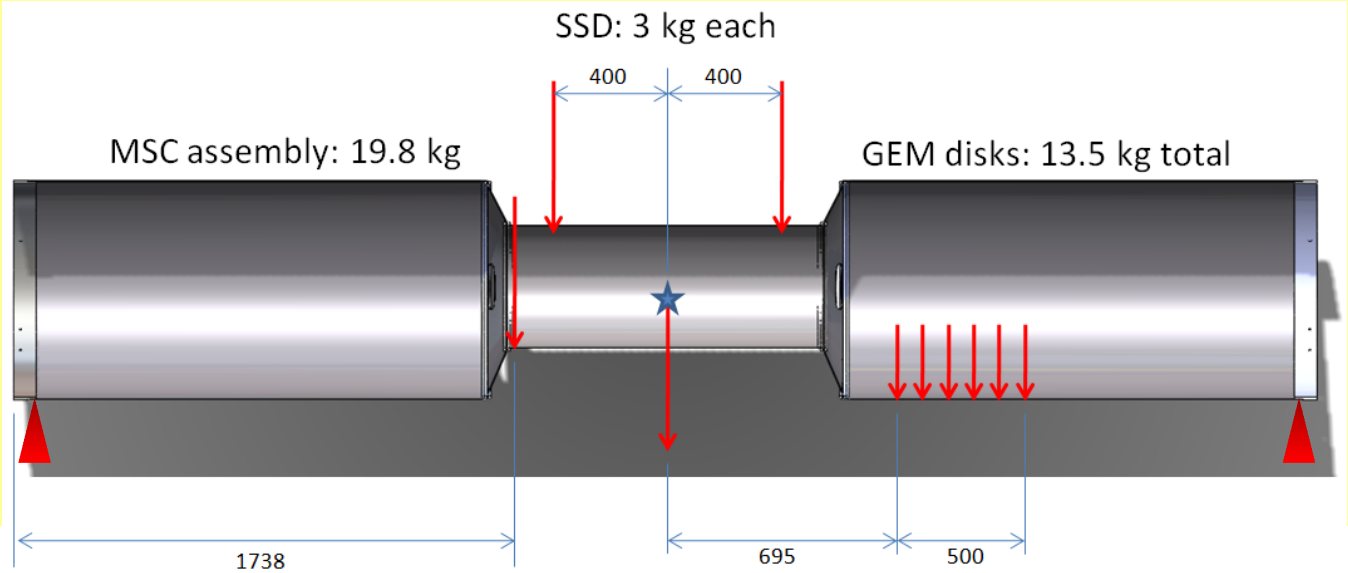

Weight: ~35 kg

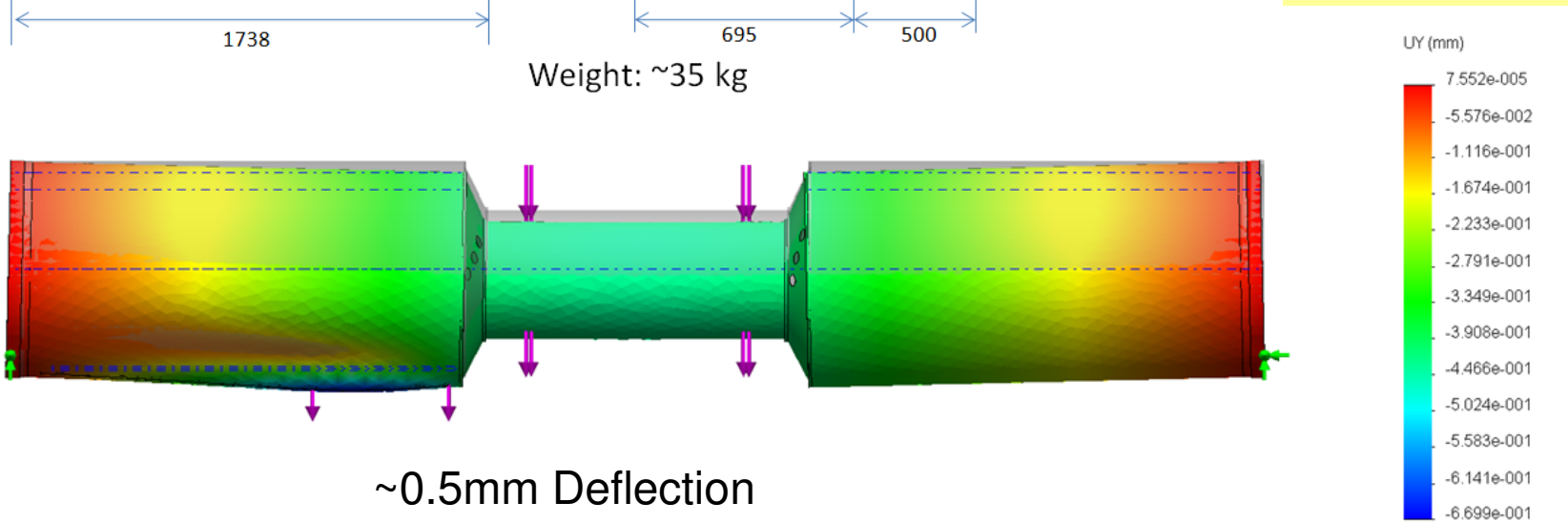

~0.5mm Deflection

Gerrit van Nieuwenhuizen

HFT/Stability

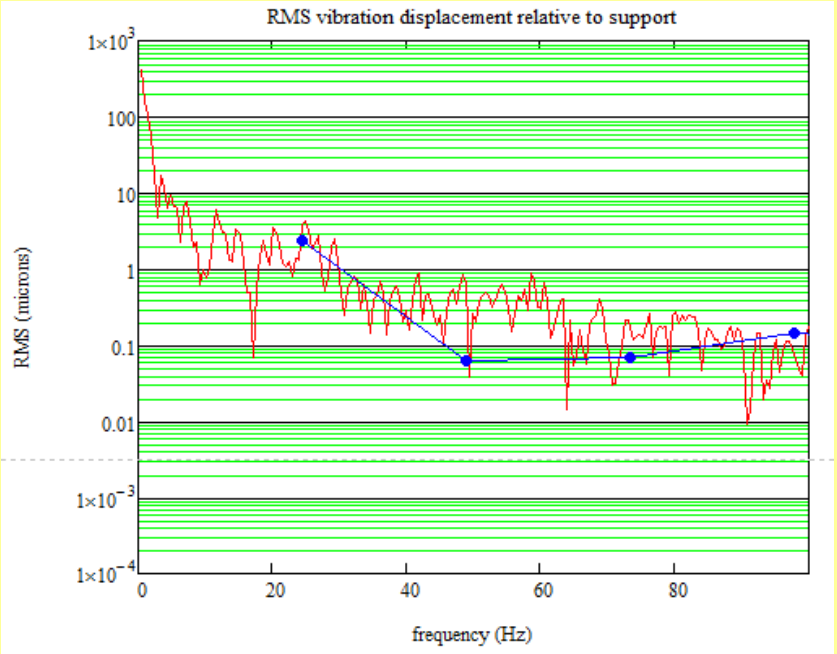

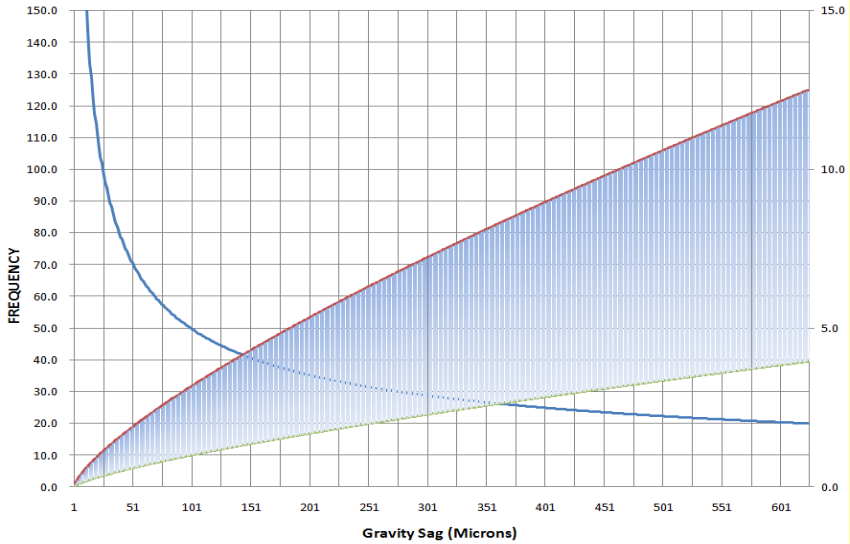

- Stability of IDS not critical for HFT unless Beam Constraint used (100μm)
- It is critical for FGT—FGT is intimately involved in design of IDS
- Gravity Sag can be used to project RMS Stability
- 0.5mm sag has F_0 ~20Hz
- For Given PSD, Vibration is <10μm RMS
- IDS easily meets this requirement as designed

HFT/Performance

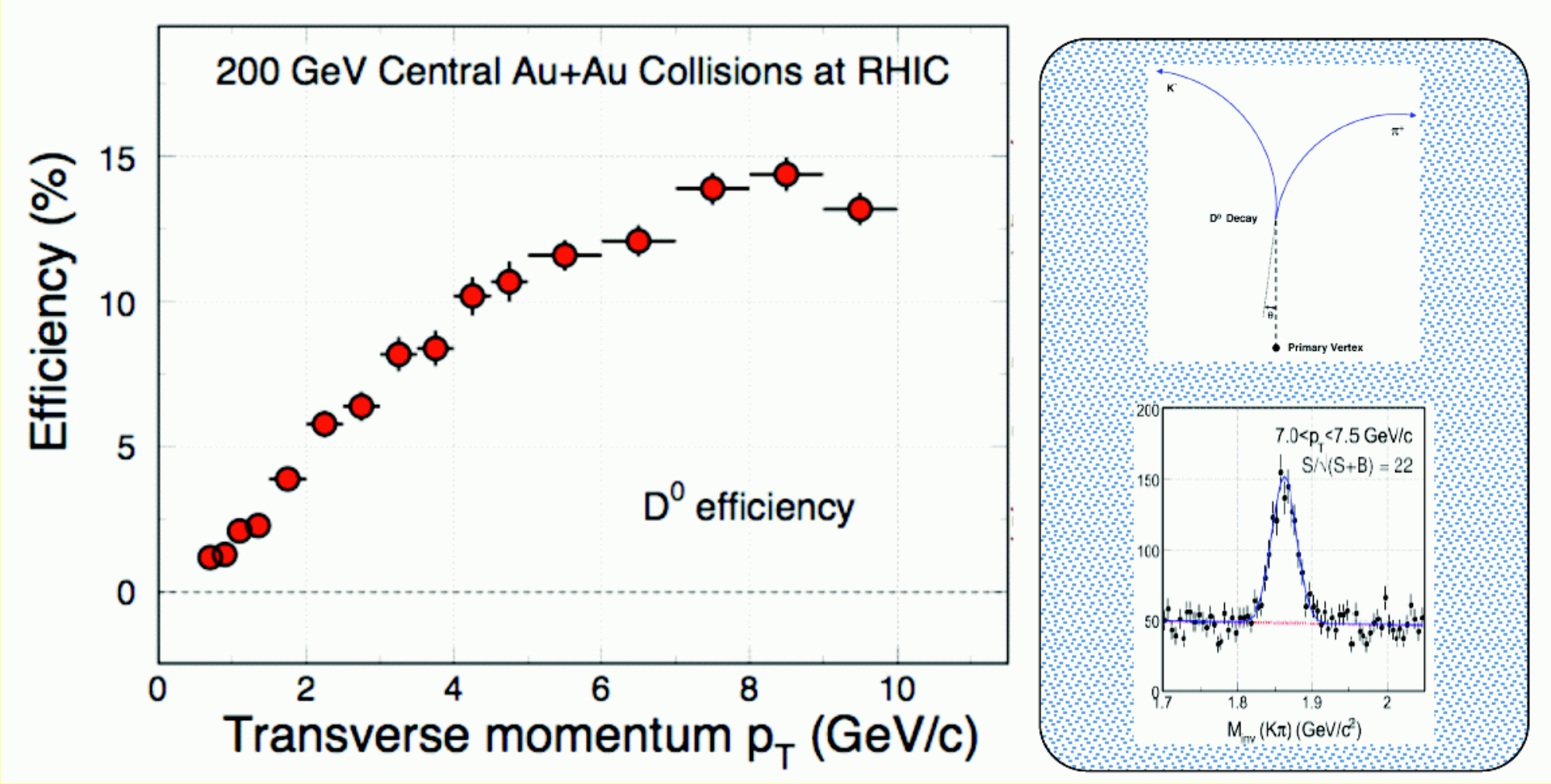

Because of the thin pixel layers the HFT will be able to measure down to Pt ~ 0.5 GeV/c

HFT/Flow

500M minimum bias events with induced D0 flow from cascade model
Tracked through STAR with the HFT upgrade

500M min. bias
= 1 month of running

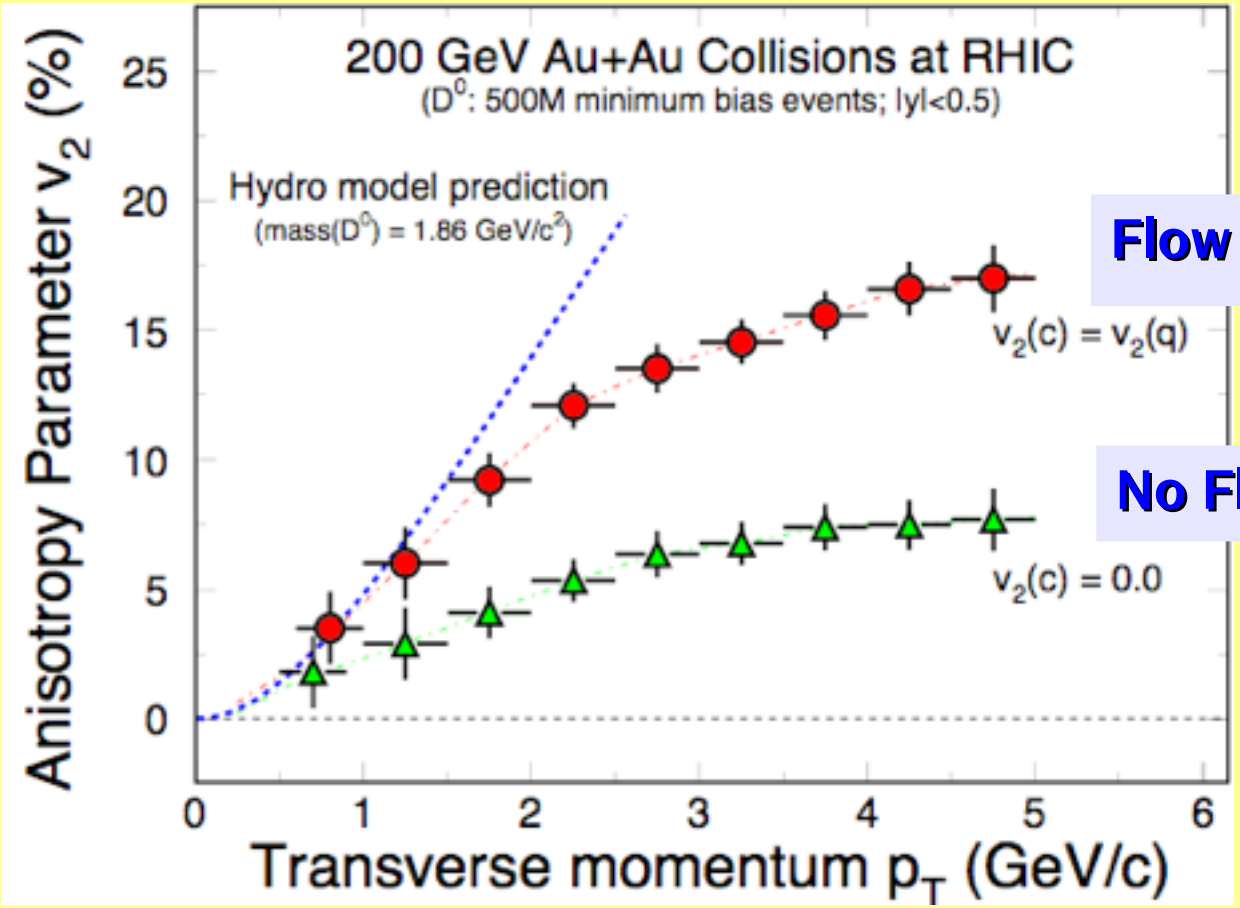

Flow → Thermalization of light-quarks

No Flow → Drag coefficients

HFT will allow for precision measurements to address questions with respect to thermalization and in-medium effects

HFT/Suppression

500M minimum bias events from cascade model, D0 suppressed like light flavor
Tracked through STAR with the HFT upgrade

500M min. bias
= 1 month of running

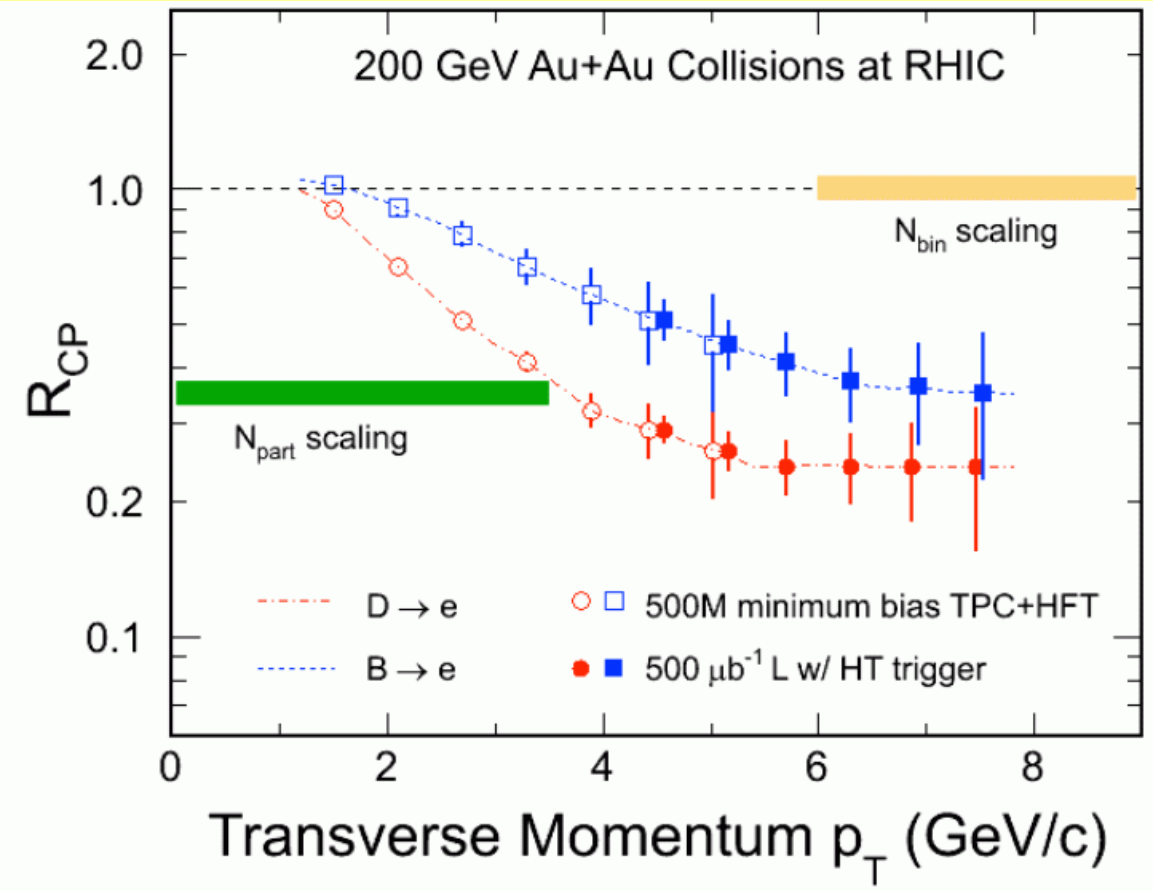

Significant contribution of electrons from bottom decay

Topological reconstruction of D0 necessary

HFT will allow for precision charm measurements to address questions with respect to collisional and radiative effects

HFT/Whole_Lot_more

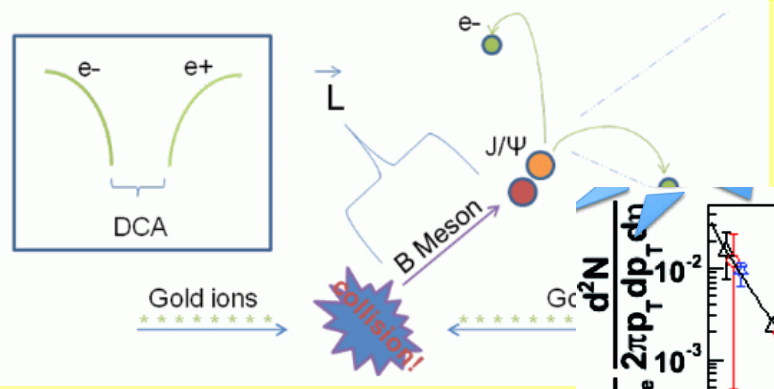

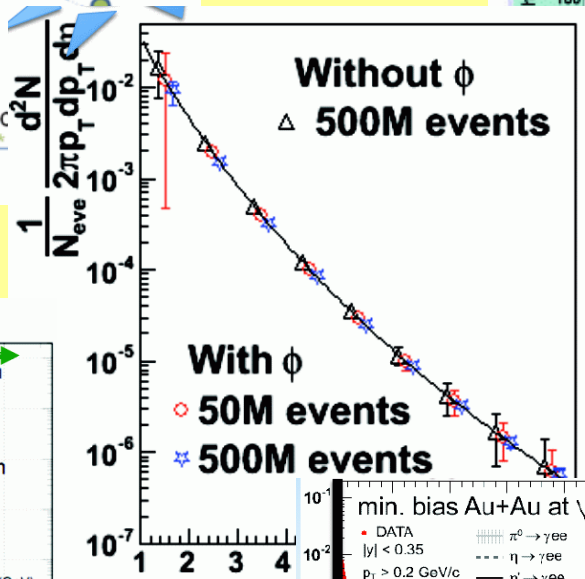

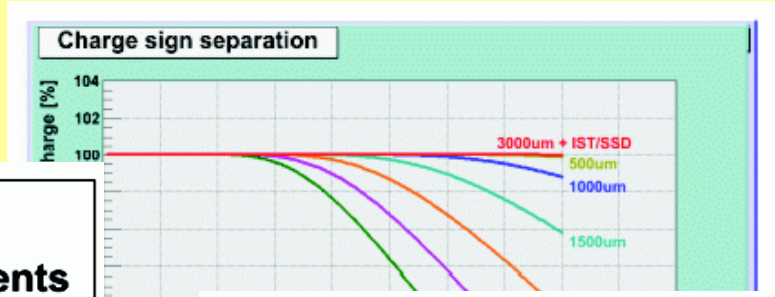

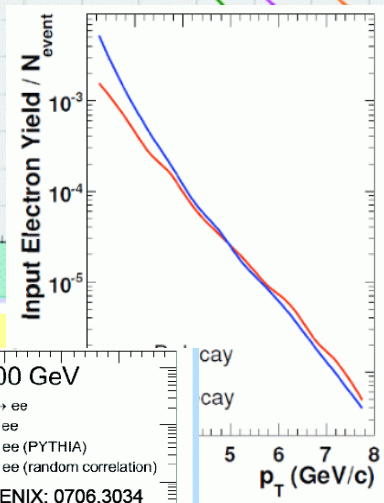

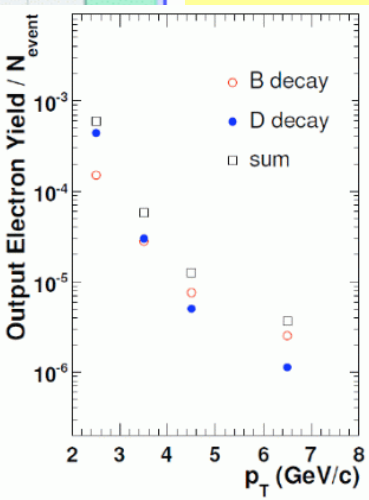

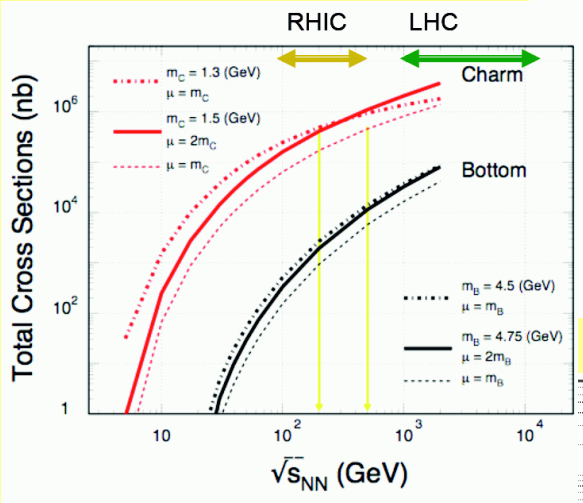

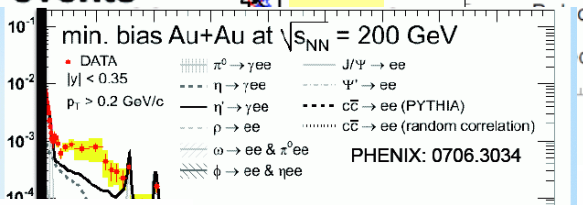

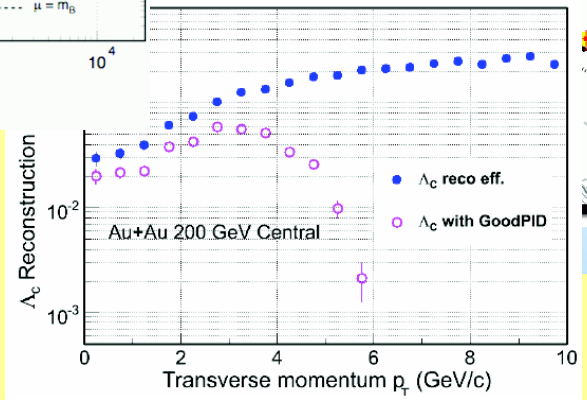

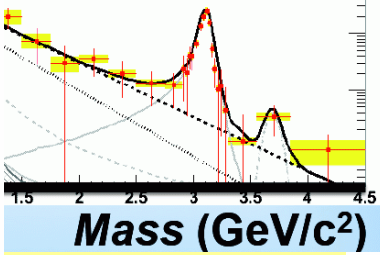

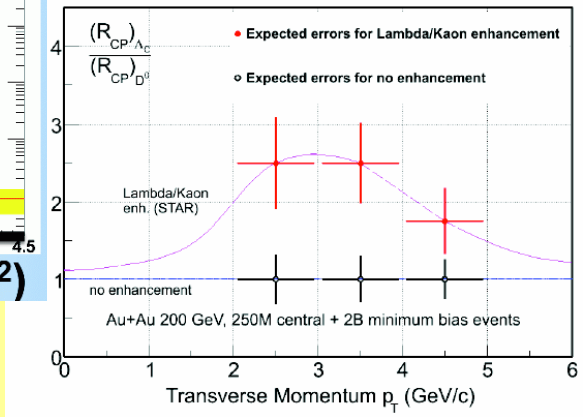

Waiting for the latest physics predictions before planning CD-2

Gerrit van Nieuwenhuizen

HFT/Funding

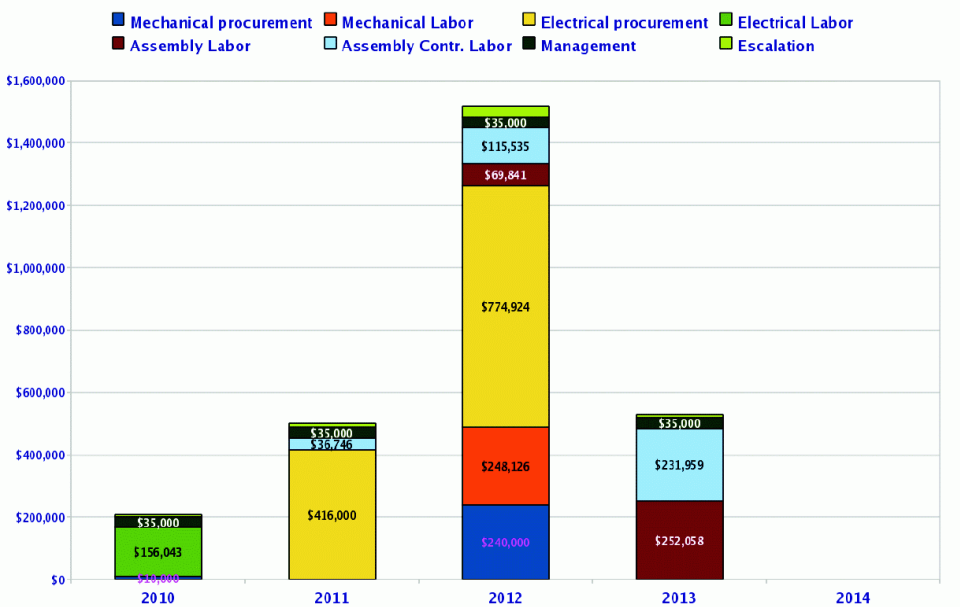

FY12	220	120

WBS	Title	Cost	Contingency %	Contingency $	Low range	High Range
1.1	Project Management	1002	9%	90	1047	1124
1.2	Pixel	4780	32%	1540	5550	6859
1.3	Intermediate Silicon Tracker (IST)	2650	36%	960	3130	3946
1.4	Silicon Strip Detector (SSD)	660	44%	290	805	1052
1.5	Integration	1380	43%	600	1680	2190
	subtotal	10472	33%	3480	12212	15170
	Contributed Labor	2345		0	2345	2345
	Total Project Cost	12817		3480	14557	17515

Gerrit van Nieuwenhuizen

HFT/Schedule

ID	mile stones	2010				2011				2012				2013				2014		
		Q4	Q1	Q2	Q3	Q4	Q1	Q2	Q3	Q4	Q1	Q2	Q3	Q4	Q1	Q2	Q3	Q4	Q1	Q2	Q3
1	Receive Prototype Sensors from IPHC																				
2	Pixel Prototype Sector Design Complete																				
3	Prototype Insertion mechanism Testing Complete																				
4	Receive final Ultimate Sensors from IPHC																				
5	Sector Assembly start																				
6	PXL detector available for insertion																				

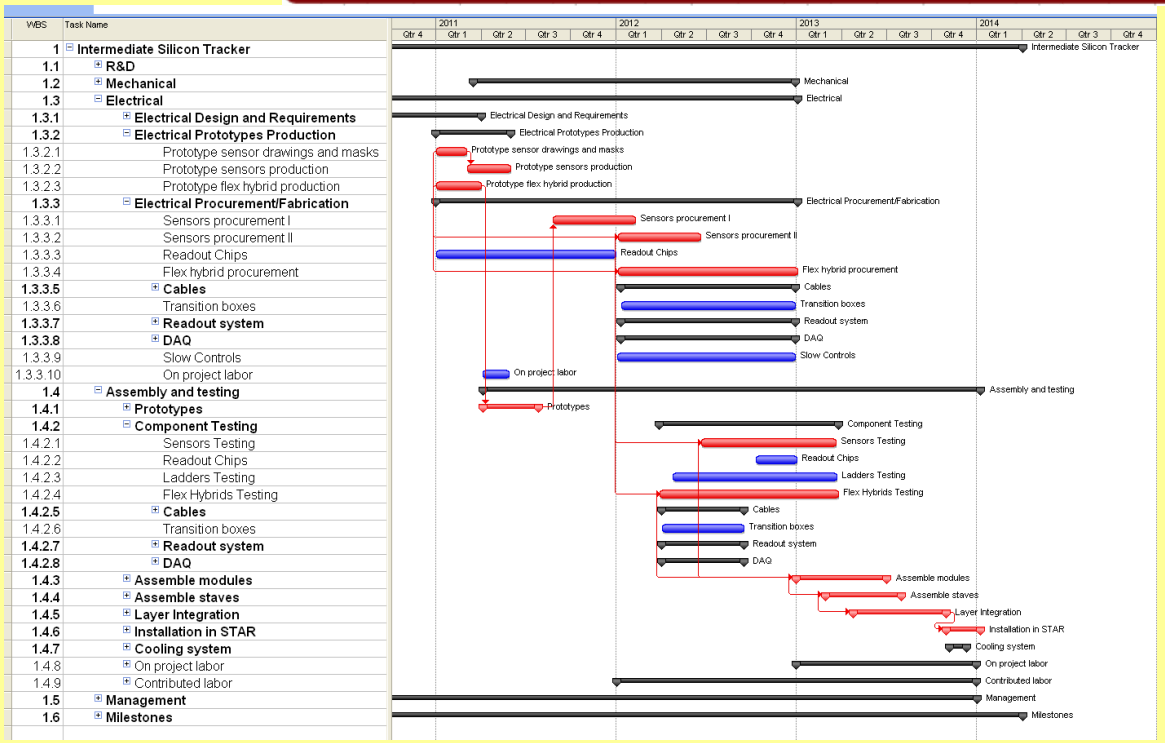

date	milestone
Q3 FY10	Review of board layout for ladder board and RDO Start board (prototype) fabrication for both
Q2 FY11	Finish testing ladder board @BNL (digital event processing only). Finish testing RDO @BNL. Integrated testing @ Subatech for both boards
Q3 FY11	Develop slow controls and DAQ software
Q4 FY11	Produce full complement of boards
Q4 FY12	Move Full System to STAR for test
Q3 FY13	Install completed SSD in STAR

Planning to be ready for Run 14

Gerrit van Nieuwenhuizen

HFT/Summary

HFT upgrade essential to extend STAR HI physics to heavy flavor sector

All components of HFT have been defined through Conceptional Design Report

All components of HFT are still on schedule, but slow funding is becoming an issue

Waiting for CD-1, preparing for CD-2/3

Backup: ISTSchedules

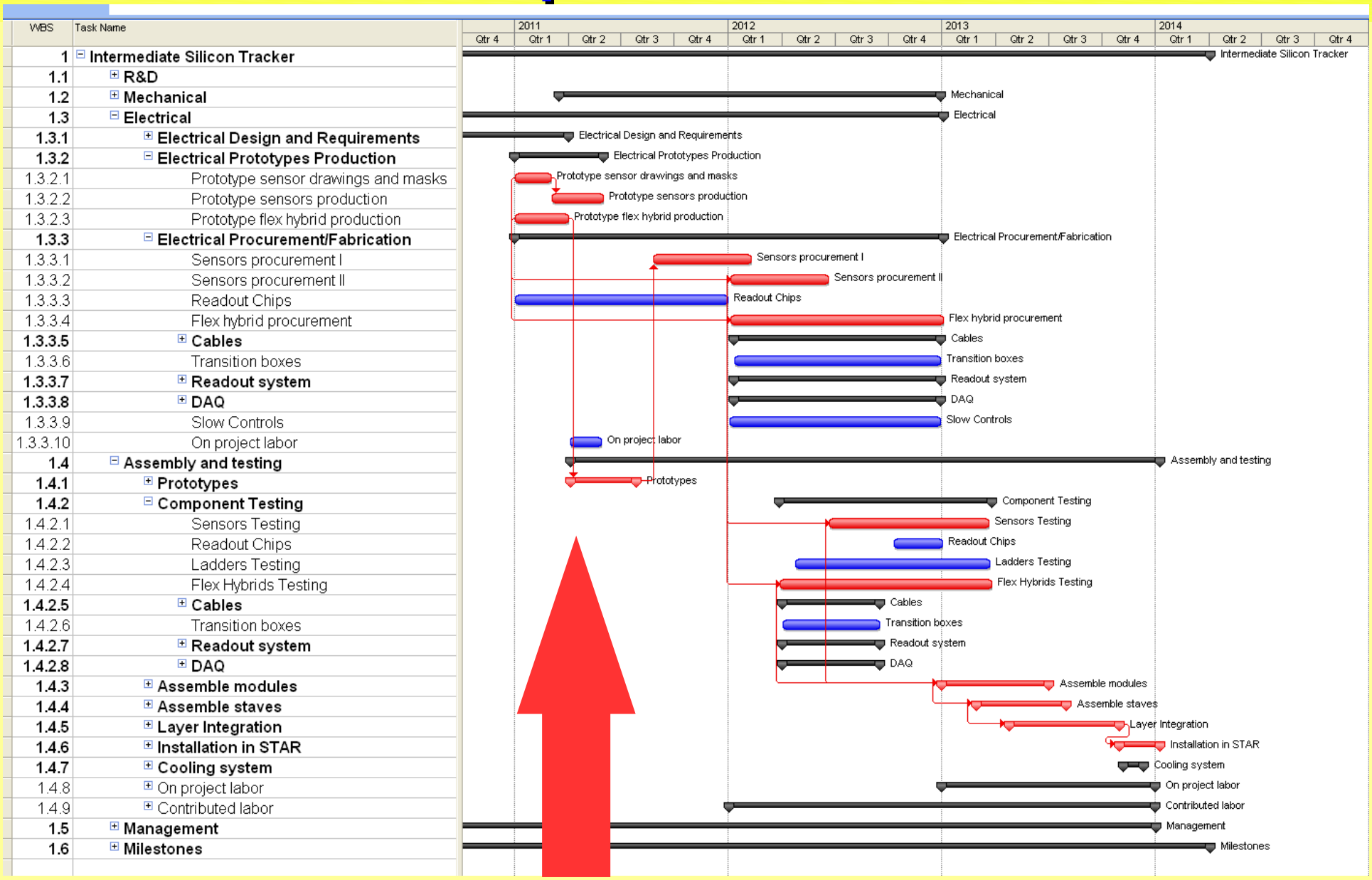

Shortterm we are on track as long as the funding arrives as expected

Gerrit van Nieuwenhuizen

Backup: MAPS vs Hybrid Pixel

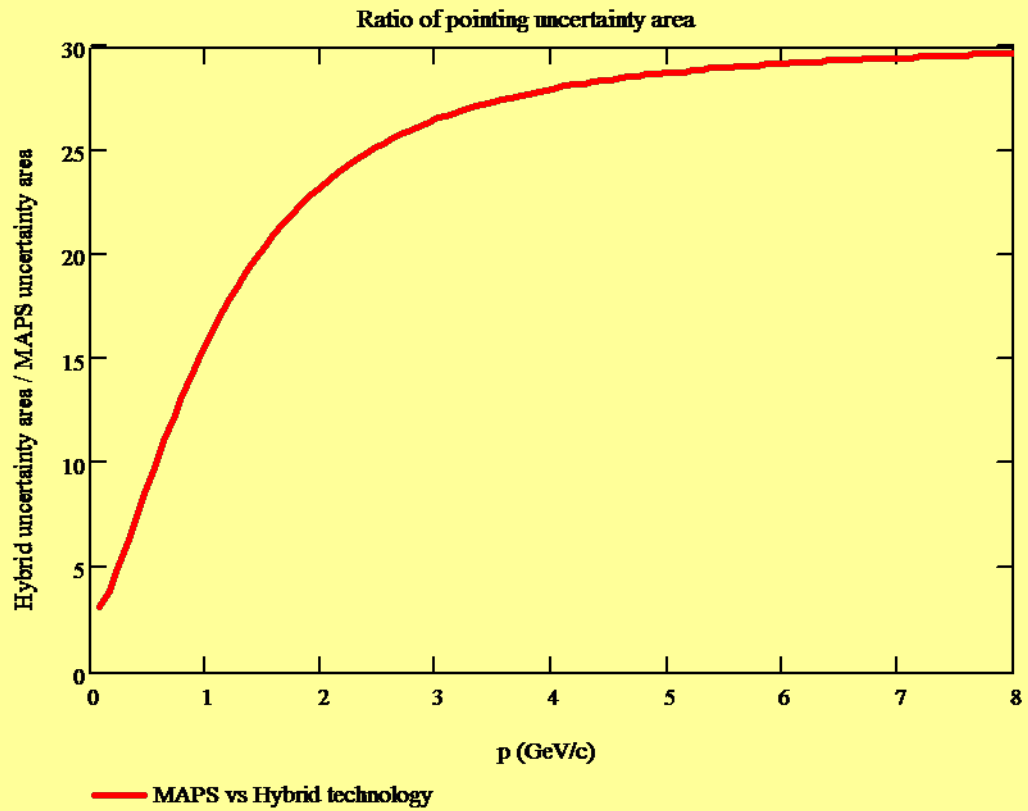

A comparison of pointing resolution performance between hybrids and MAPS or CCDs is shown in Figure 30 using two detector layers one at 2.5 cm radius and the other at 8 cm radius. The figure shows the ratio of the area resolution for pointing back to the interaction point. The hybrid used for this comparison has 50 μm by 450 μm pixels and has a radiation thickness of 1.2%. The MAPS has 18.5 μm by 18.5 μm pixels. The position resolution of the MAPS is set by the pixel size and the expected mechanical stability window of 20 μm. The radiation thickness for the MAPS is 0.37%. This is what can be achieved for a detector ladder. This includes a thinned silicon detector chip (50 μm), carbon composite support, a flex readout cable and the required bonding adhesives. In this comparison a 0.75 mm beryllium beam pipe has been included at a 2 cm radius.

Gerrit van Nieuwenhuizen

Backups/Cooling system

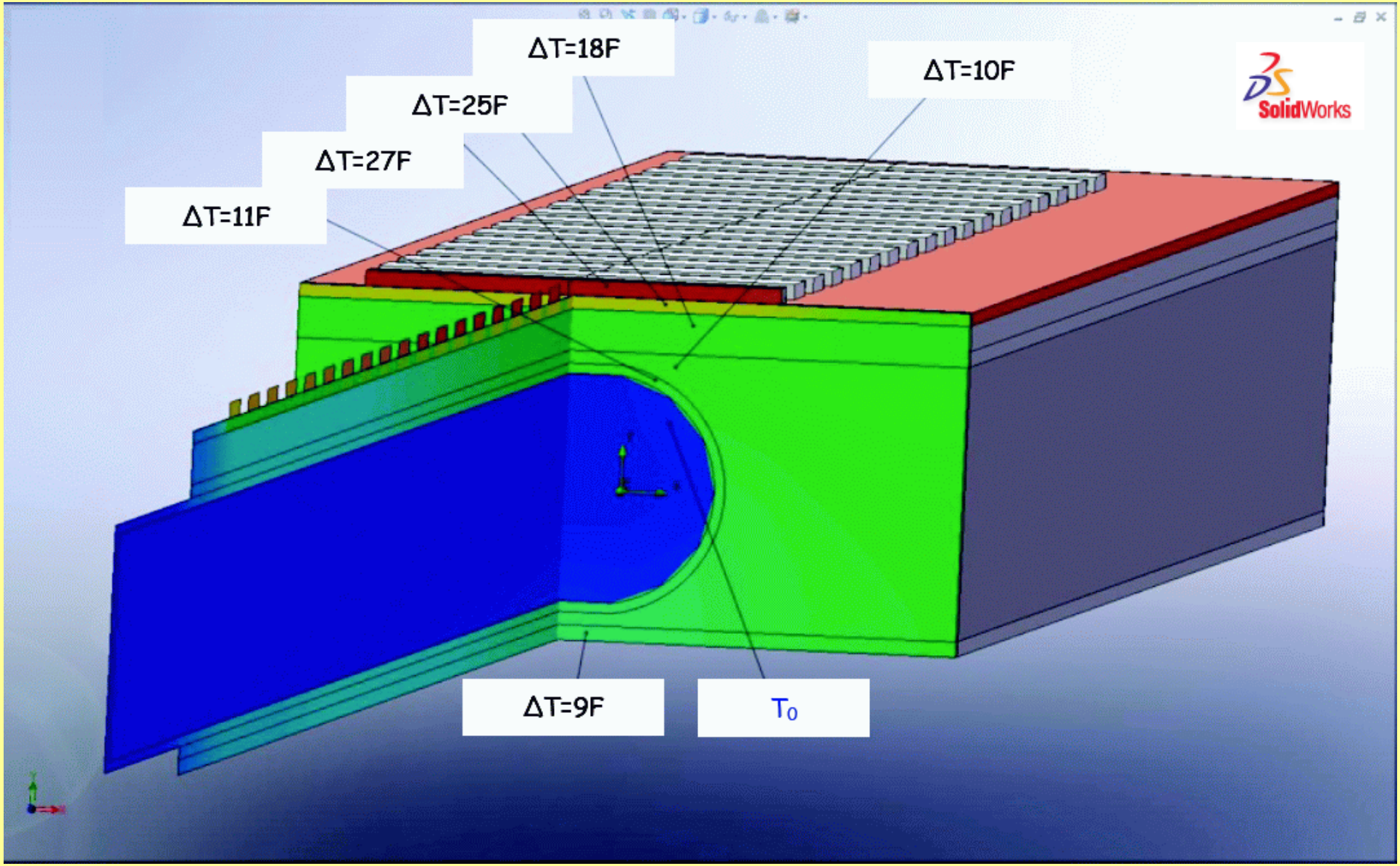

FloWorks shows a ΔT of 27 F for the ladder and 10 F for the ladder wrt the fluorocarbon based coolant

Gerrit van Nieuwenhuizen