Massachusetts Institute of Technology

STAR COLLABORATION MEETING / JULY 10 – JULY 15, 2006

READOUT and Hybrid Status

Miro Plesko

Gerrit Van Nieuwenhuizen, Miro Plesko, Robert Redwine
Karen Dow, Ernie Ihloff, Bernd Surrow, Frank Simon
S. Steadman, Jim Kelsey, Dave Underwood, Douglas Hasell

In readout is used APV25-S1 chip

APV25-S1 chip

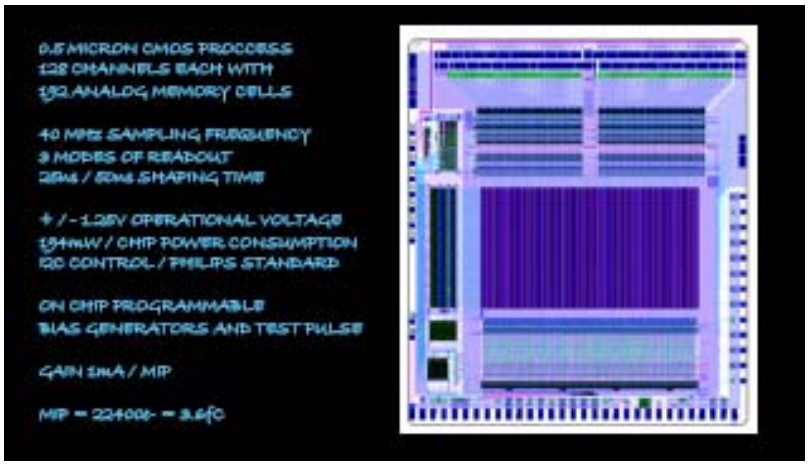

One channel architecture

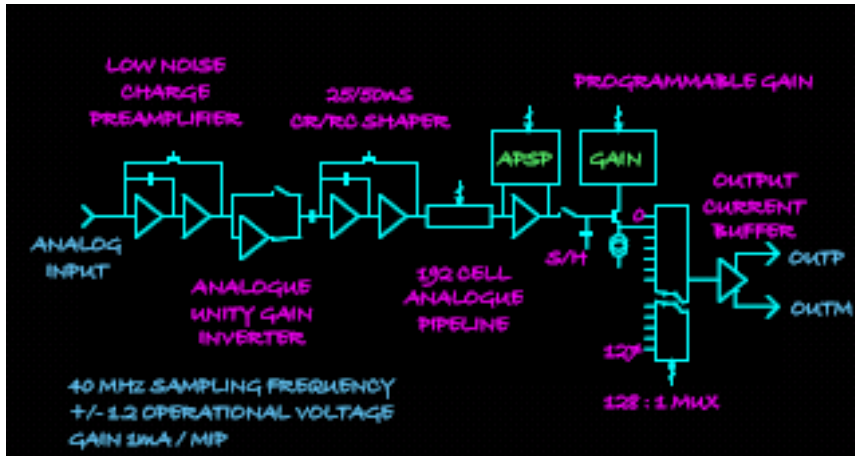

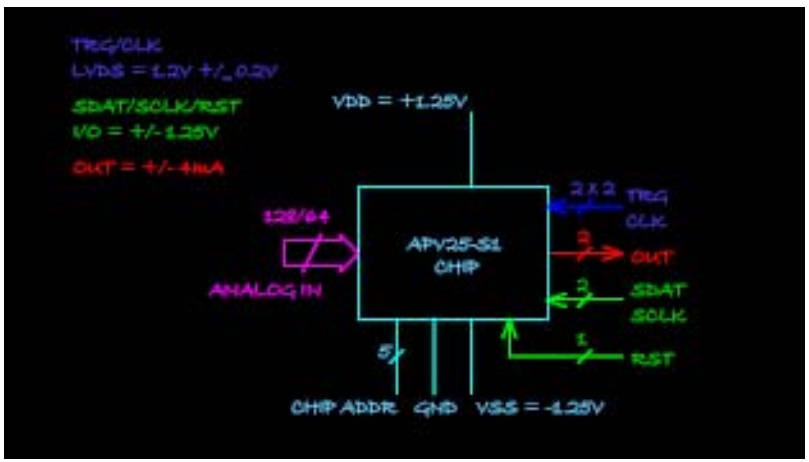

Communication with APV25-S1

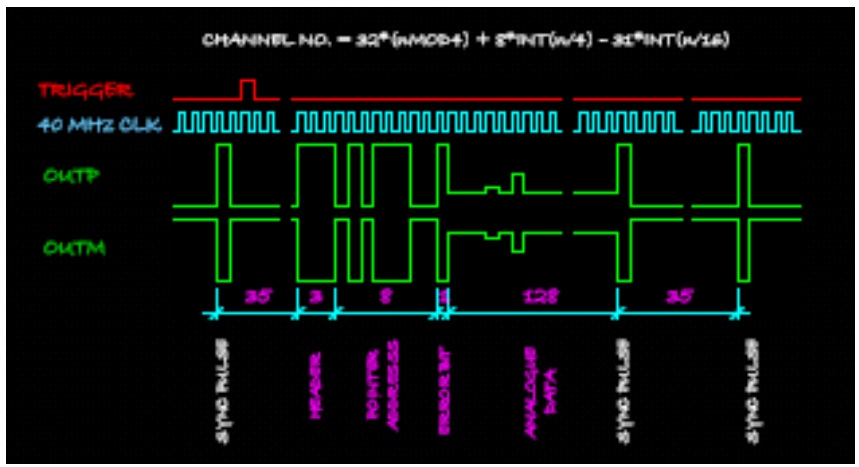

APV25-S1 readout sequences

2D_GEM Readout / Prototype Design

2D_Readout Board for GEM

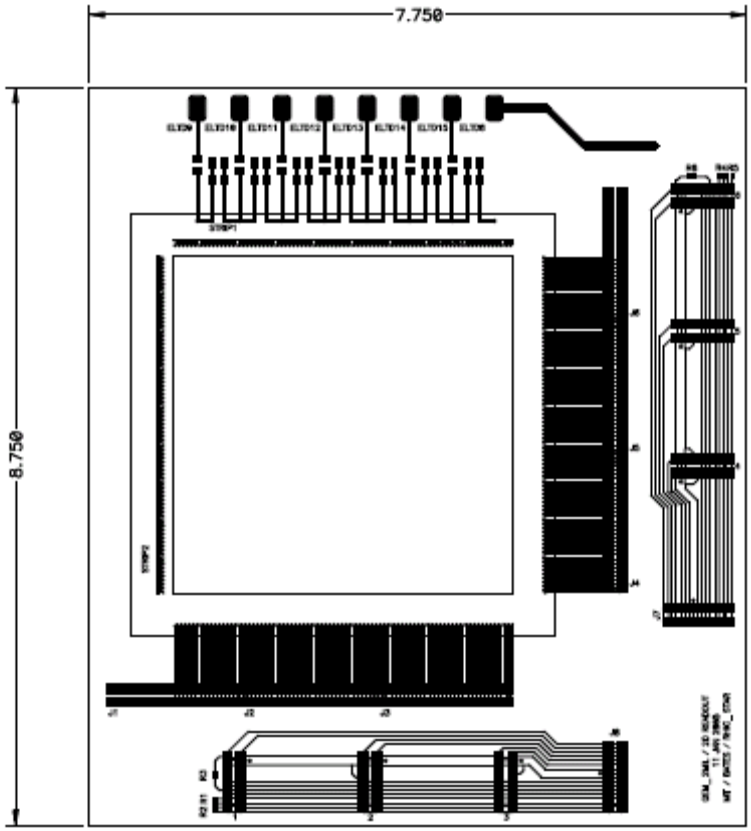

GEMCU_X Readout Controller

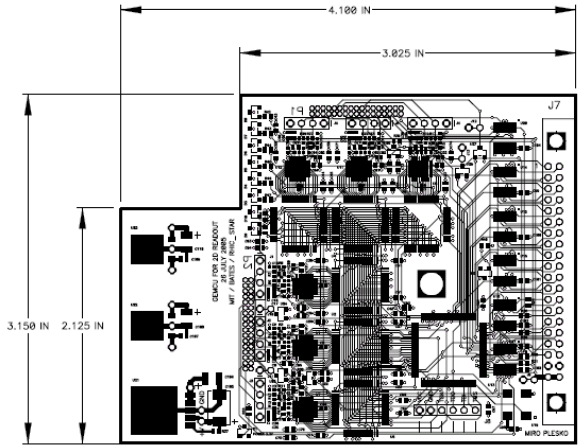

APV25-S1 Module for GEM

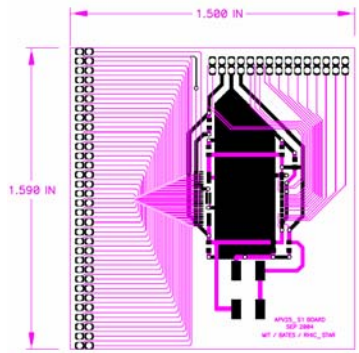

APV25-S1 wire bonds for 2D_GEM Detector

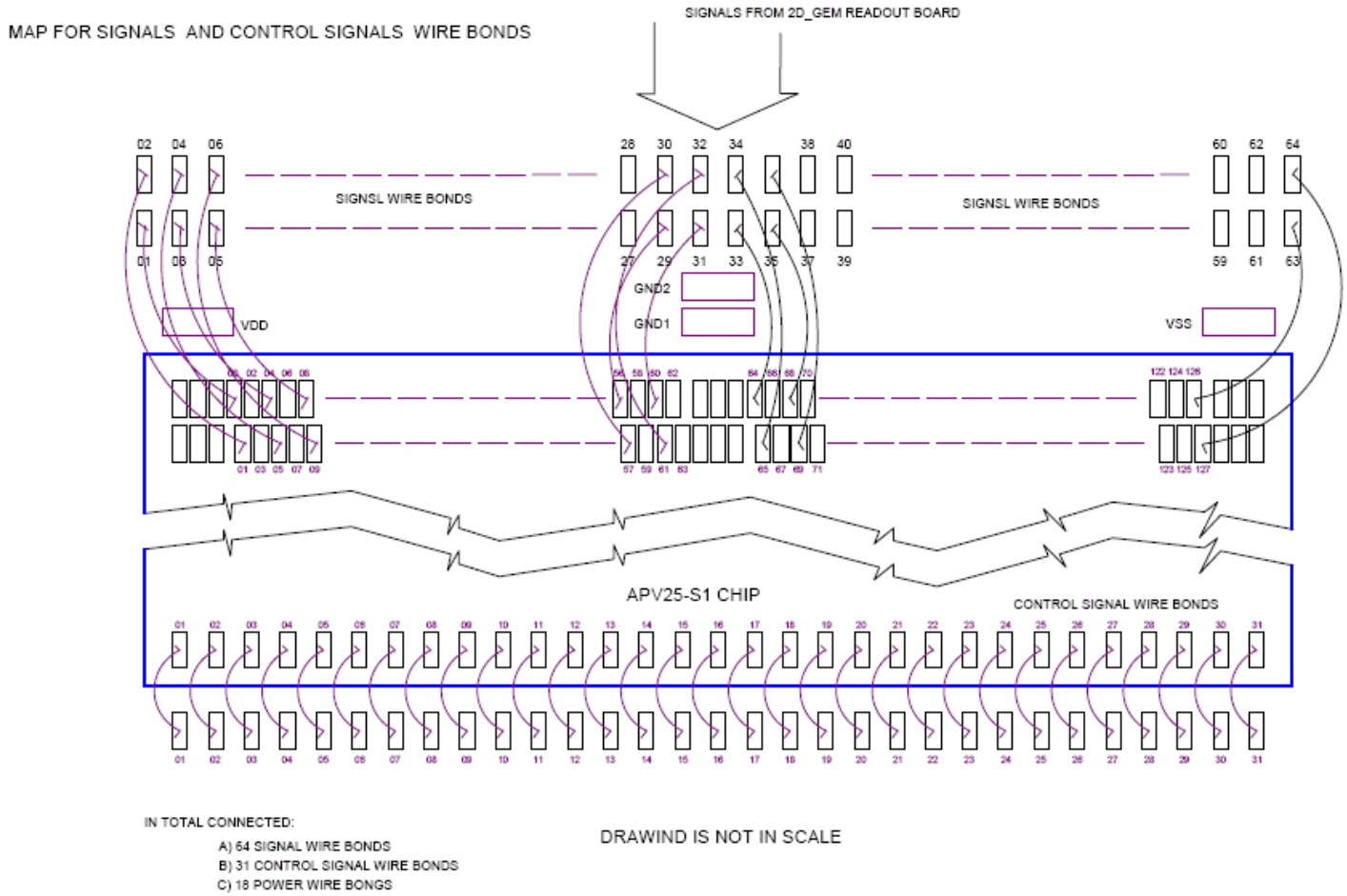

For assembly reason in 2D_GEM we are using only 64 channels at each APV25-S1

2D_GEM Readout / Prototype Realization

GEM Detector

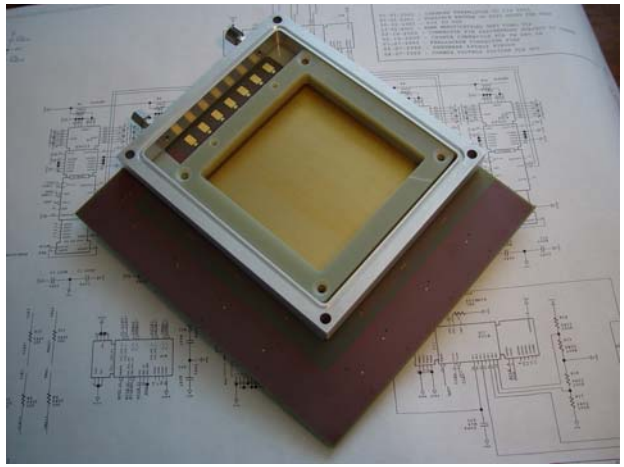

APV25-S1 Module

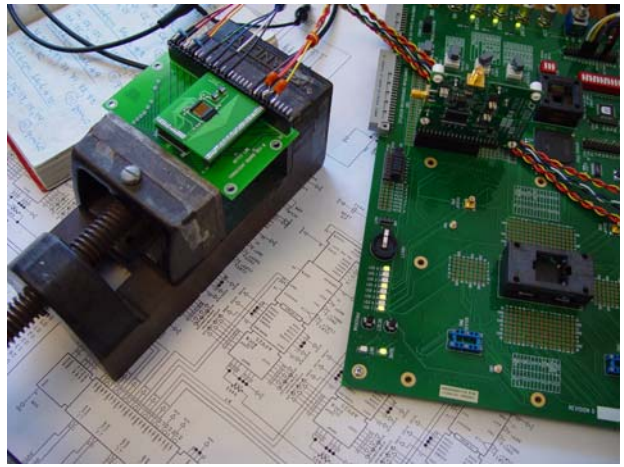

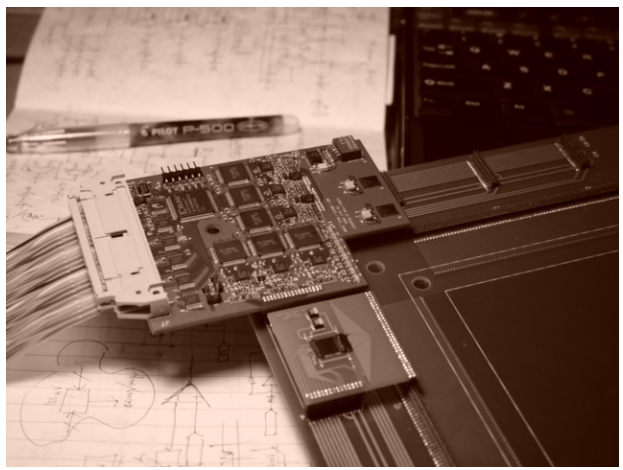

GEM Readout Controller

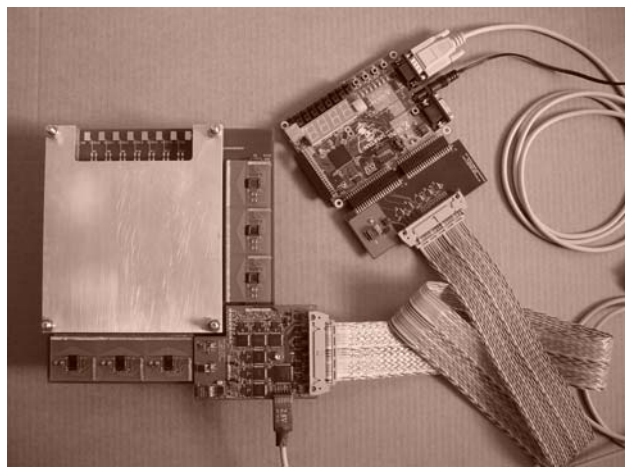

GEM Readout Prototype

Kapton Hybrid for Silicon Pre-Prototype

Vertex Silicon Sensors setup

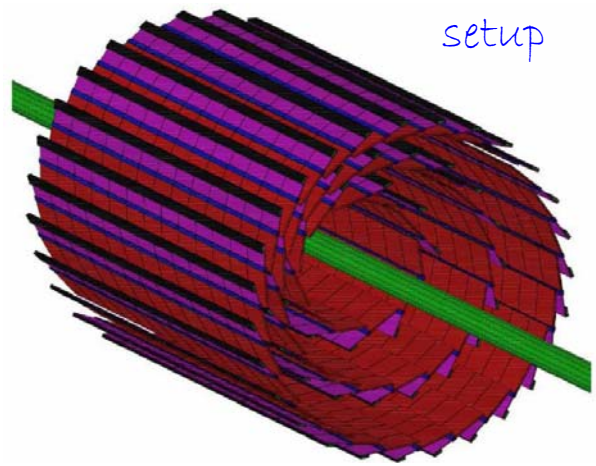

One assembling option for KHC_Z

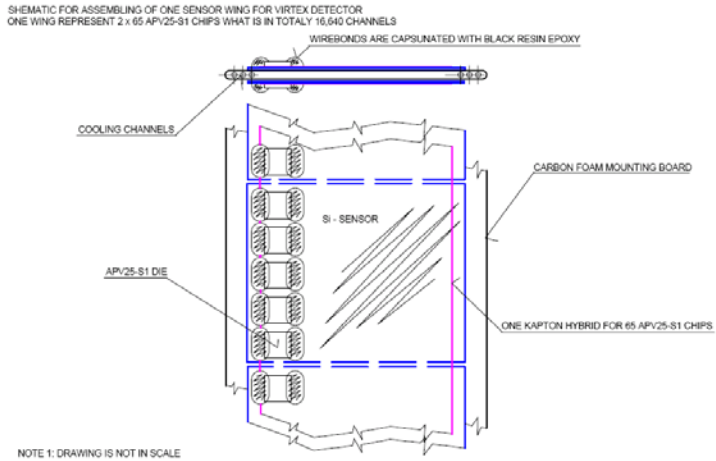

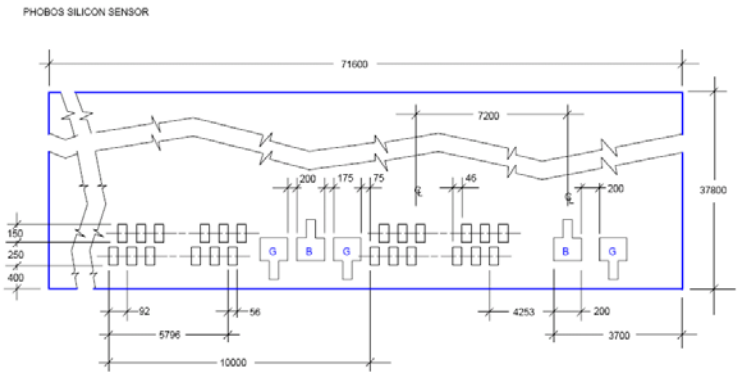

NOTE 1: DRAWING IS NOT IN SCALE
NOTE 2: ALL DIMENSIONS ARE IN MICROMETERS

Phobos Sensor and KHC_Z used for readout Pre-Prototype

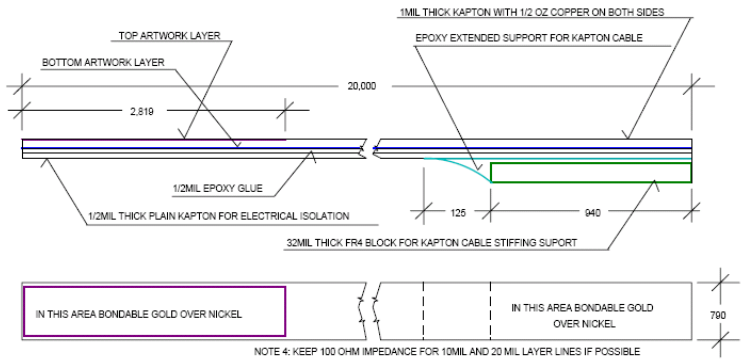

ORDER AND SYMBOL OF LAYERS:

- TOP SILK TSK
- TOP MASK TMS
- TOP LAYER TOP
- BOTTOM LATER BOT
- BOTTOM MASK BMS
- BOTTOM SILK BSK

NOTE 1: DRAWING IS NOT IN SCALE
NOTE 2: ALL DIMENSIONS ARE IN MILS
NOTE 3: SEE "KHC_M" AND "FR4BLOCK" GERBER FILES

KHC_Z

Phobos Sensor Used for Pre-Prototype with Kapton Hybrid

Will be study property of readout with Kapton Hybrid glued on top of Silicon Sensor

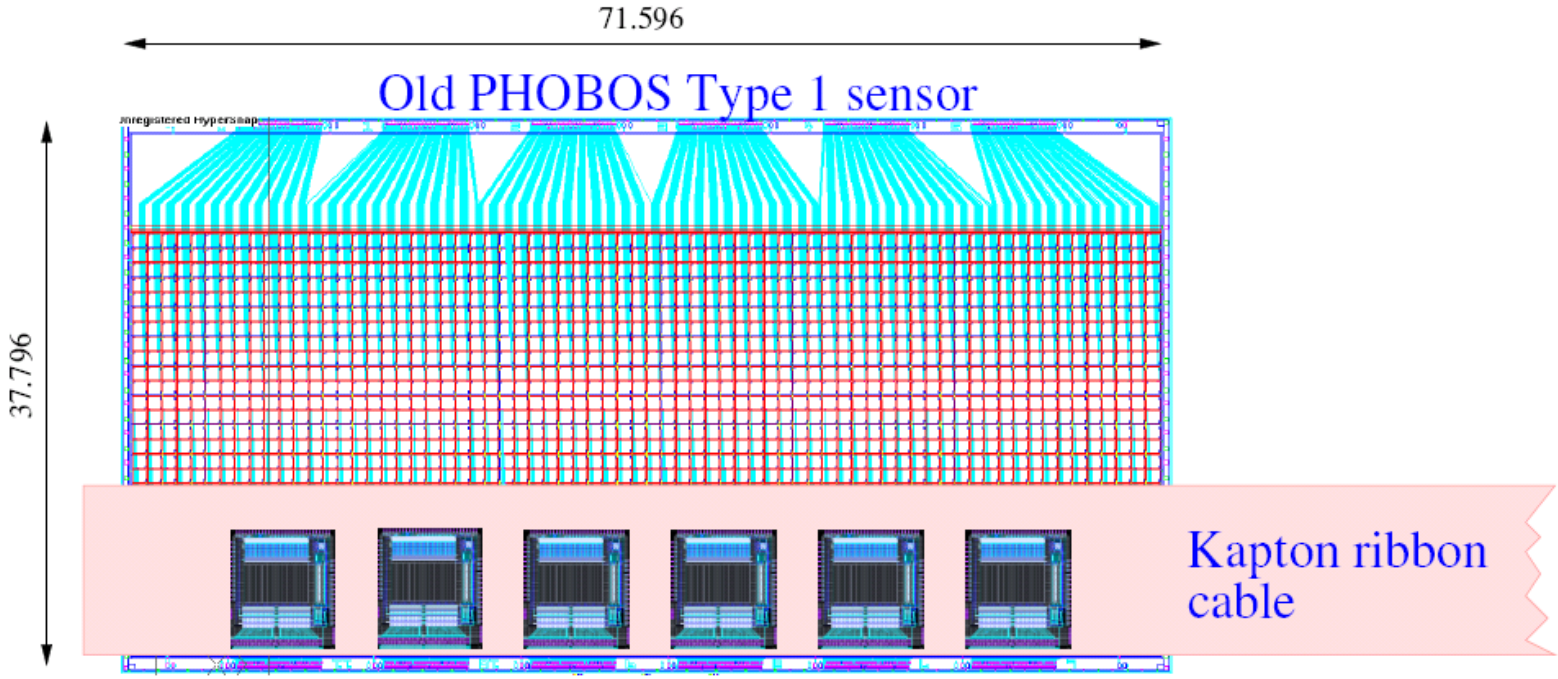

Six APV25-S1 Dies are placed on top of Kapton

Kapton Hybrid Assembly

Kapton Hybrid for Pre-Prototype Readout
- length twenty inches

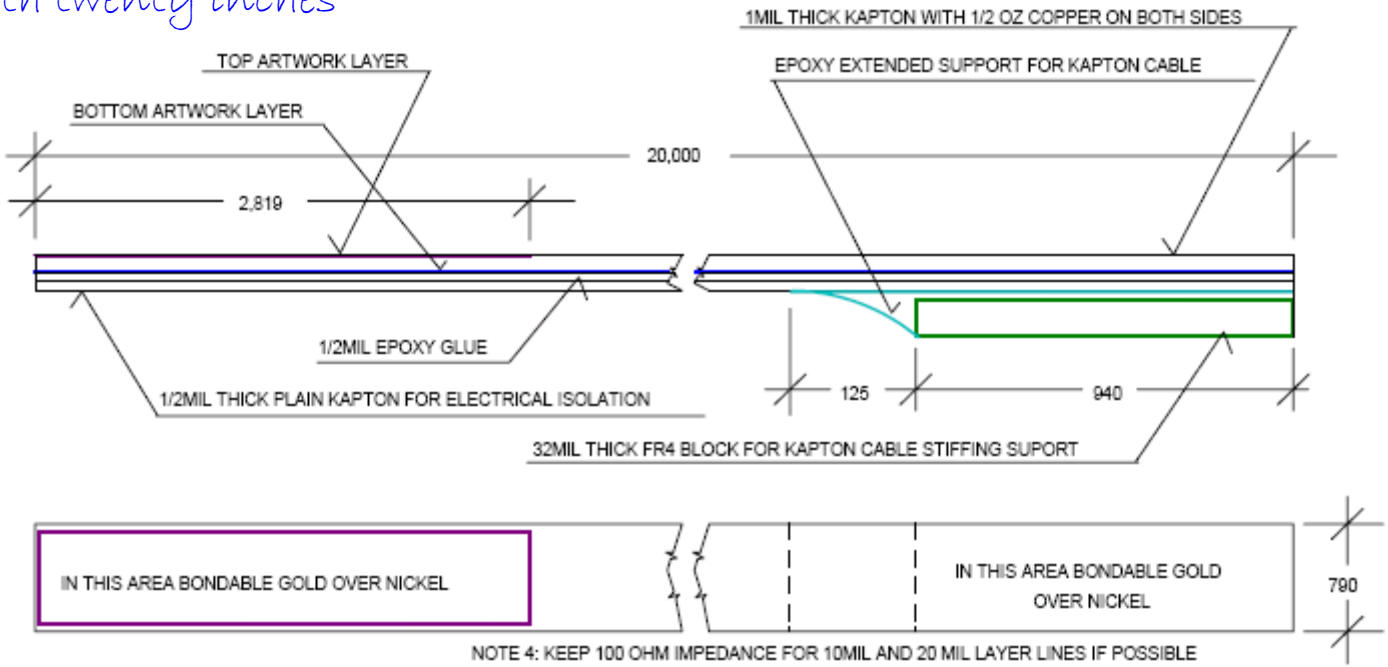

ORDER AND SYMBOL OF LAYERS:

- TOP SILK TSK
- TOP MASK TMS
- TOP LAYER TOP
- BOTTOM LATER BOT
- BOTTOM MASK BMS
- BOTTOM SILK BSK

NOTE 1: DRAWING IS NOT IN SCALE
NOTE 2: ALL DIMENSIONS ARE IN MILS
NOTE 3: SEE "KHC_M" AND "FR4BLOCK" GERBER FILES

Final product length up to twenty feet

Test Version of Kapton Hybrid

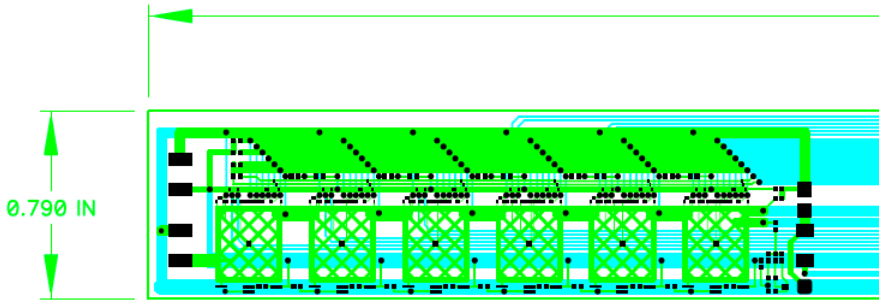

Top Artwork of KHC Readout

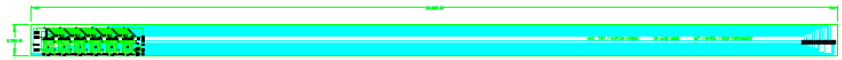

Full view of KHC for Pre-Prototype setup

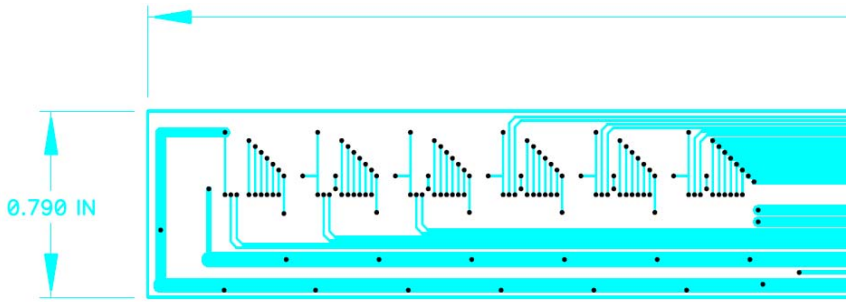

Bottom Artwork of KHC Readout

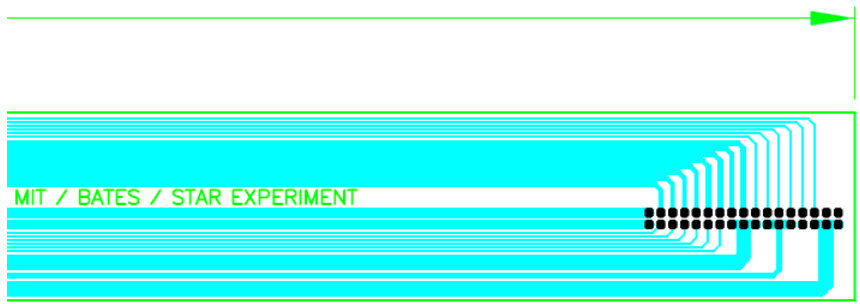

Connector's part of KHC

Kapton Hybrid Assembling

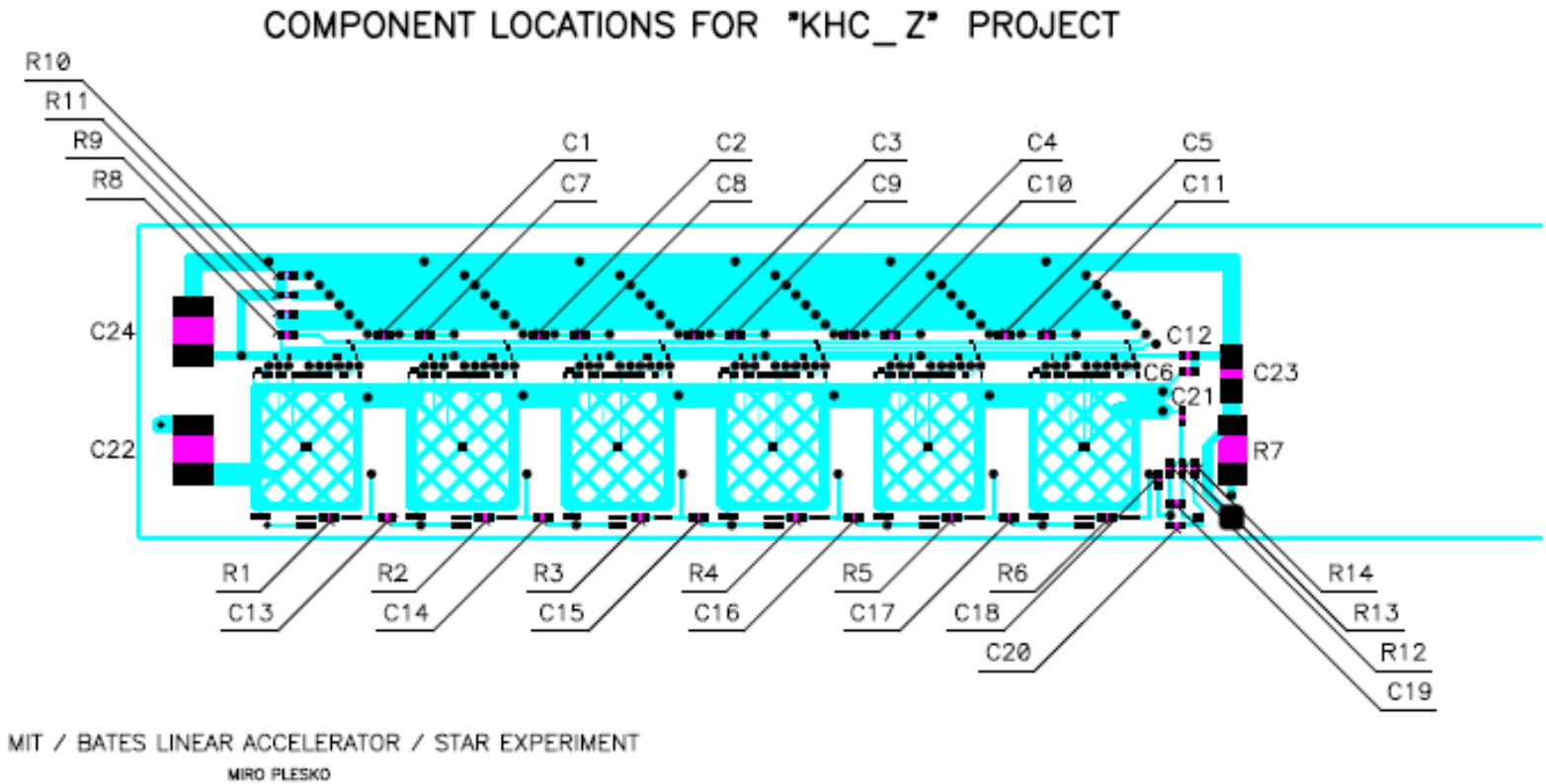

From material budget reason we are using components as small as possible.
In this case most components are 0201 size family (not easy to assemble).

Wire Bonds for APV25-S1 Dies on Kapton Hybrid

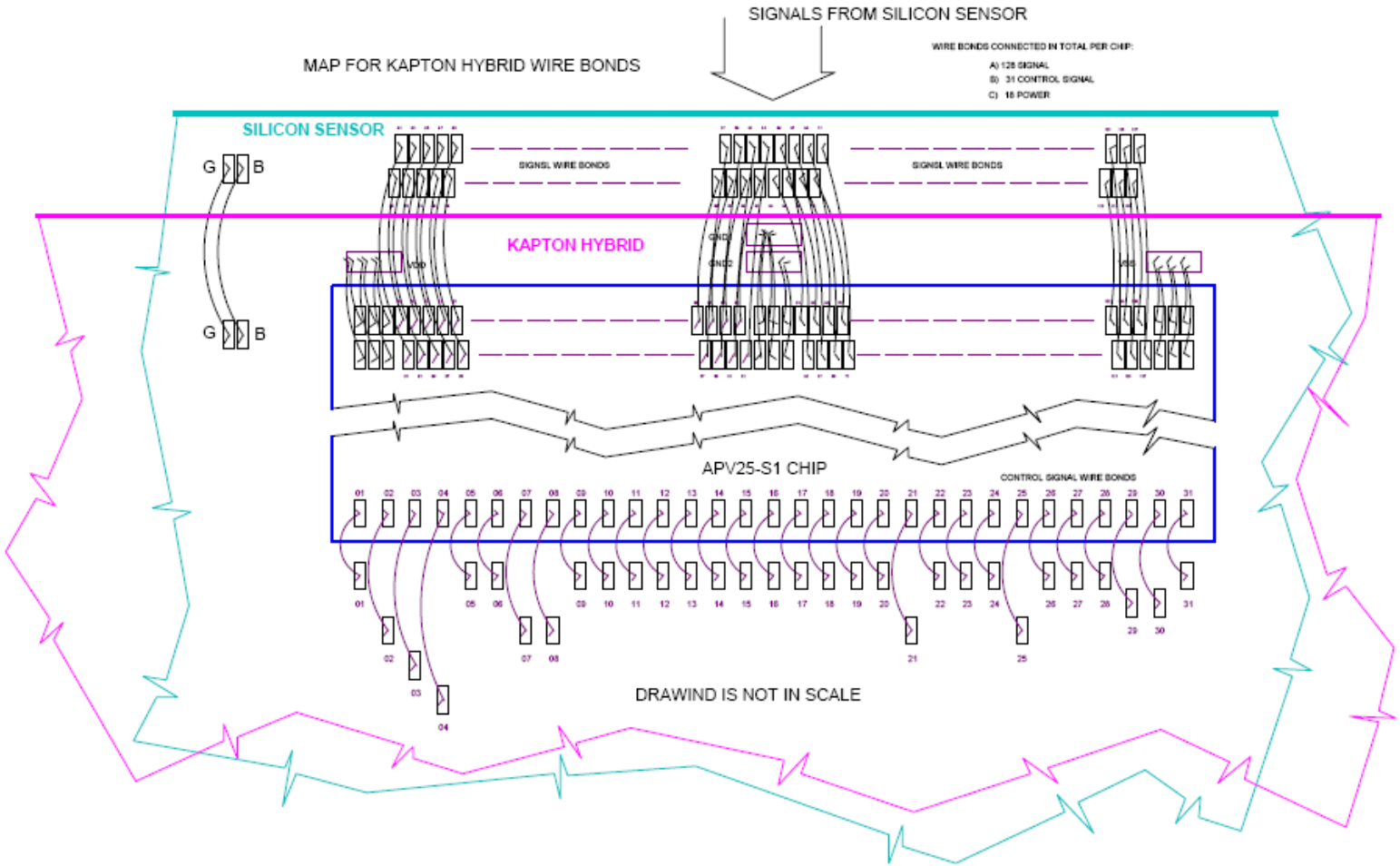

In this version are used all 128 channels from each APV25-S1 chip

Readout Electronics for Kapton Hybrid

Interface Module for KHC

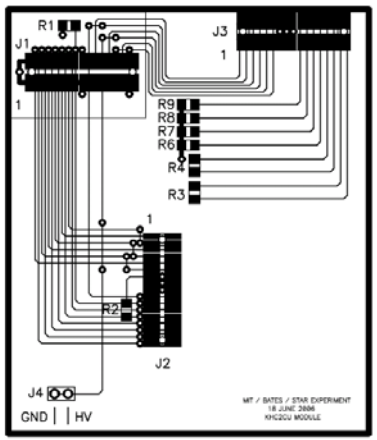

KHC connected into KHC Interface

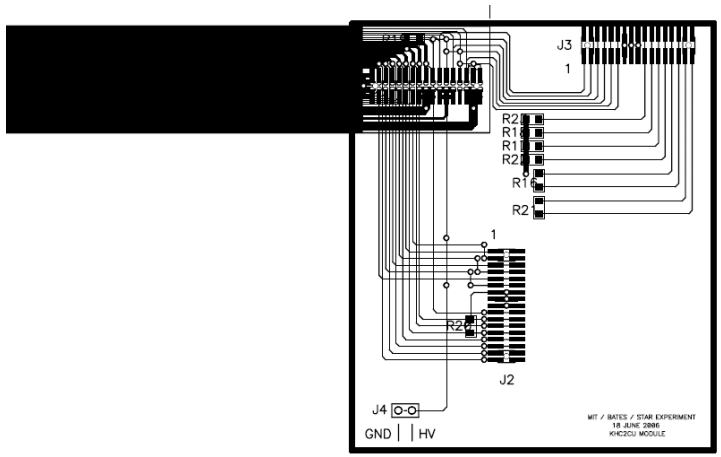

GEMCU used as KHC Readout

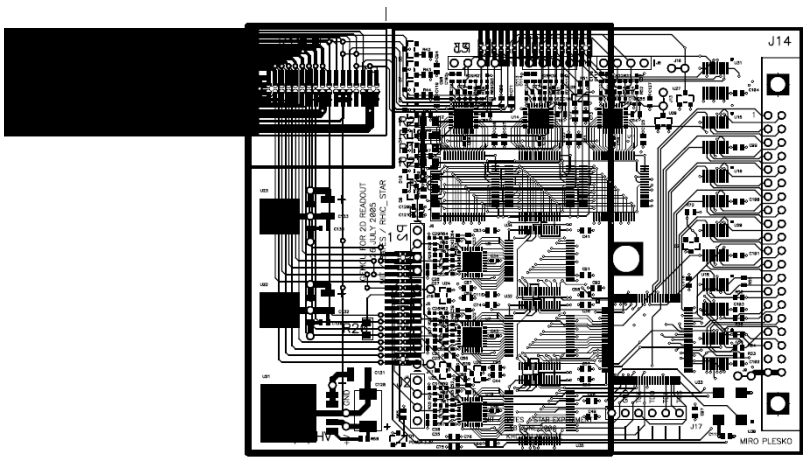

GEMCU Readout Module

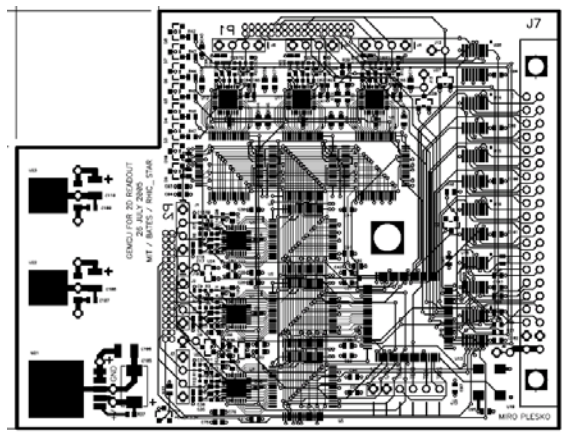

Power Distribution for Front End Electronics

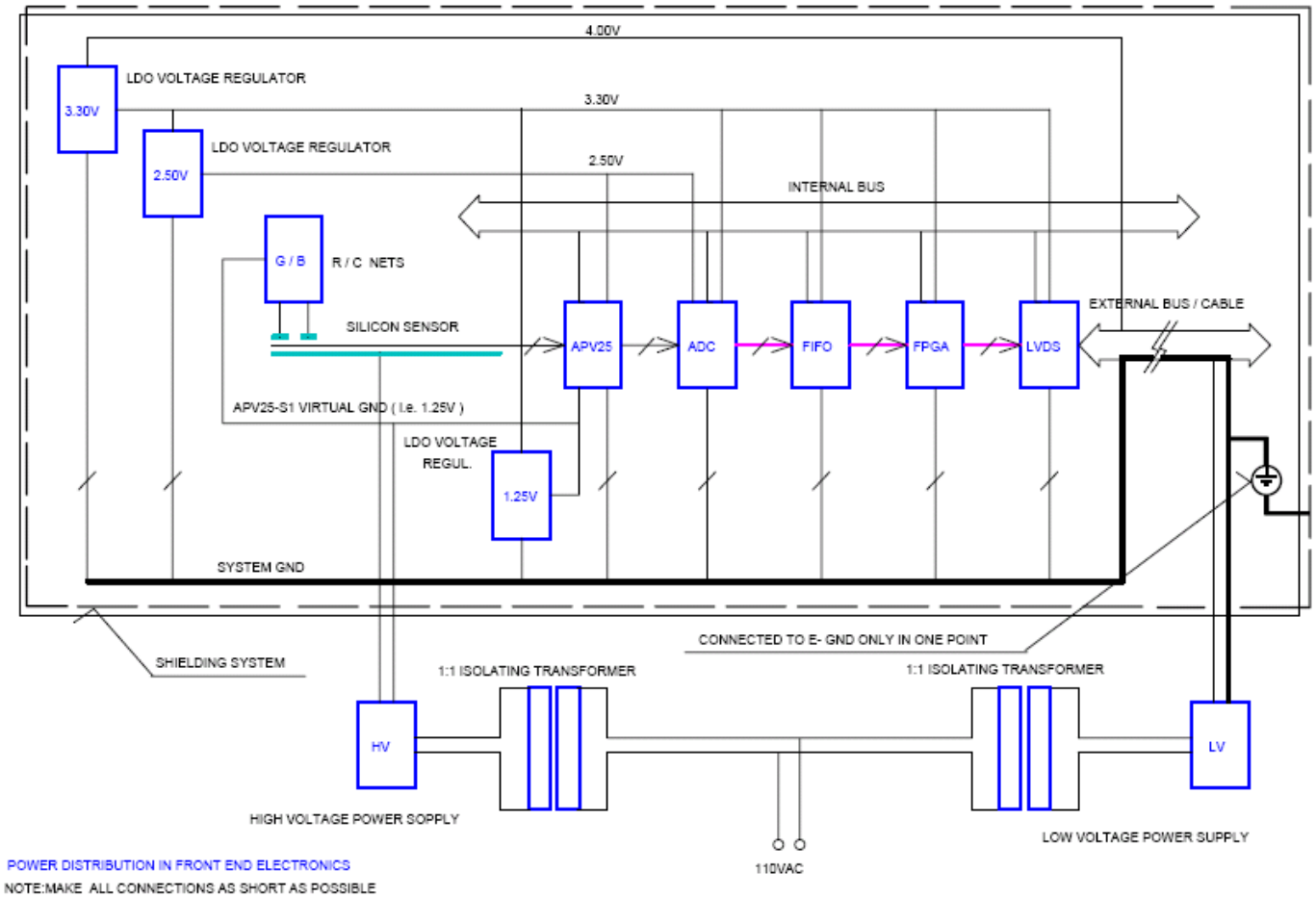

Pre-Prototype Kapton Hybrid Schematic

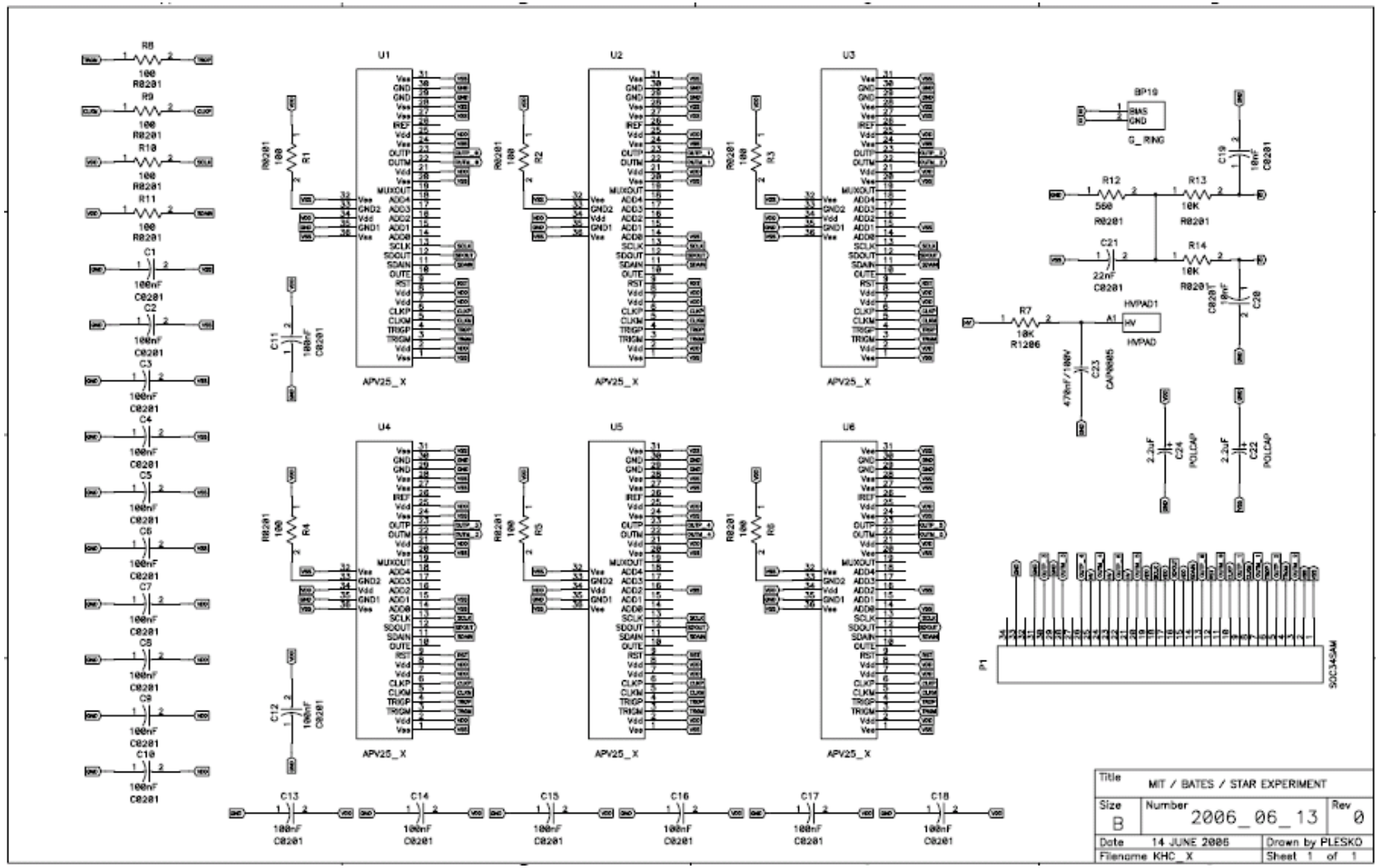

Kapton Hybrid Readout Electronics

ADC Part of Readout

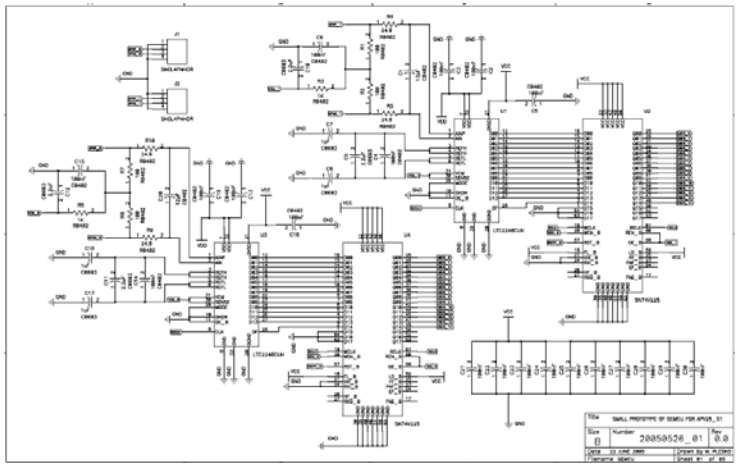

FPGA Part of Readout

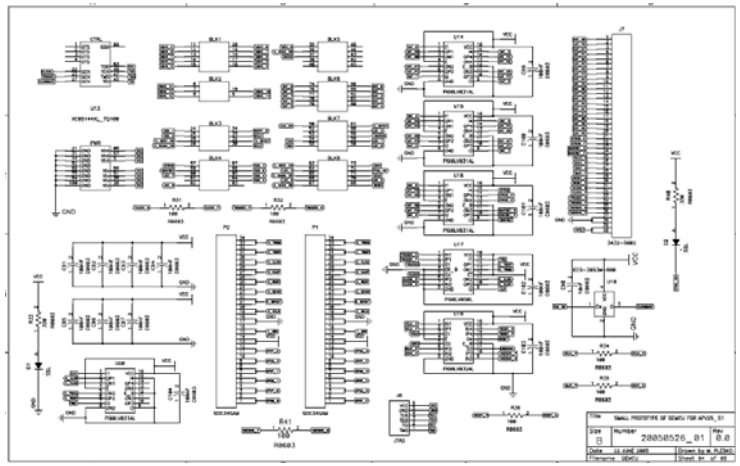

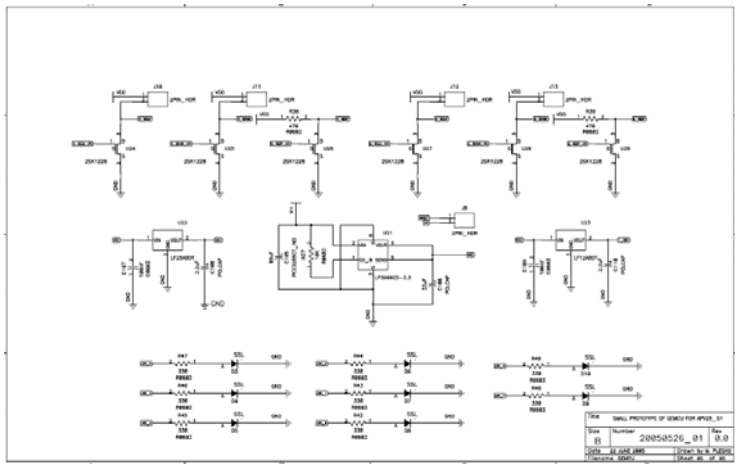

Power Managing

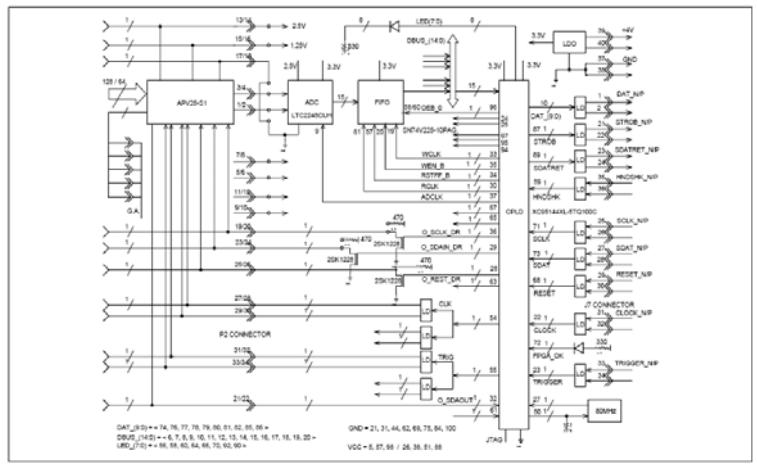

Block overview of Readout

Summary

A) 2D_GEM detector and GEMCU_X readout

- 2D_GEM and GEMCU_X was successfully realized and test. This units work properly and they are reprogrammable by VHDL programming tool.
- Readout is realized via TCPU. Program written in Linux by Dave Underwood.

B) Assembling Silicon Sensors with Kapton Hybrid for test purposes to find optimal configuration of Front End Electronics.

- For test Pre-Prototype setup we use existing Phobos Silicon Sensors.
- There will be Phobos Silicon Sensor assembled with Kapton Hybrid in two ways:
    1) Kapton hybrid glued on top side of Silicon Sensor and
    2) Kapton Hybrid placed by side of Silicon Sensor.
- APV25-S1 dies are assembled on top of Kapton Hybrid and wire bonds are capsulate with black epoxy resin

C) Readout from Silicon Sensor:

- To save money for Pre-Prototype readout electronics there is used existing GEMCU_X readout electronics and software..